Bredgar Road, Gillingham, Kent, ME8 6PN
Tel: 01634 386683 e.mail: sales @ mixertech.co.uk
Fax: 01634 386684 Internet: www.mixertech.co.uk

General Instructions For Installation And Maintenance

Bredgar Road, Gillingham, Kent, ME8 6PN
Tel: 01634 386683 e.mail: sales @ mixertech.co.uk
Fax: 01634 386684 Internet: www.mixertech.co.uk

W A R N I N G

It is important that the oil level in the gearbox is checked prior to starting the equipment. Should the gearbox oil level be found to low, you must top up with the correct grade of oil.

If the gearbox is not filled with oil at all you must fill to the correct level with suitable lubrication. Please see IoM for details.

Starting the equipment with low or no oil will cause early and expensive failures

If in any doubt please contact Mixertech Limited on

Tel - 01634 386684
Fax – 01634 386684
Email – sales@mixertech.co.uk

Bredgar Road, Gillingham, Kent, ME8 6PN
Tel: 01634 386683 e.mail: sales @ mixertech.co.uk
Fax: 01634 386684 Internet: www.mixertech.co.uk

Operating and Maintenance Manual

General

Contents

Bredgar Road, Gillingham, Kent, ME8 6PN
Tel: 01634 386683 e.mail: sales @ mixertech.co.uk
Fax: 01634 386684 Internet: www.mixertech.co.uk

MIXERTECH 1000/2000 SERIES FLUID MIXERS WITH FLENDER MOTOX & SEW GEARED MOTORS

CONTRACT NO: **SERIAL NO:**

INSTRUCTIONS FOR INSTALLATION AND MAINTENANCE

PLEASE READ CAREFULLY BEFORE INSTALLING OR OPERATING YOUR MIXERTECH MIXER

INSTALLATION

General

Units should be bolted into place as rigidly as possible to minimise vibration and movement.

Where fitted 'G' clamp mounts should be tightened using a 10mm Allen Key.

Sleeve couplings are secured to geared motor shaft and mixer output shaft by 6 or 8mm offset grub screws. When assembling, care should be taken to ensure correct seating of grub screws into 'dimples' on respective shafts.

Split muff type couplings should be assembled with even tightening of bolts after checking that drive keys are clean and neatly engaged.

Propellers are secured in a similar manner with two 6mm grub screws.

Bredgar Road, Gillingham, Kent, ME8 6PN
Tel: 01634 386683 e.mail: sales @ mixertech.co.uk
Fax: 01634 386684 Internet: www.mixertech.co.uk

MAINTENANCE

General

Maintenance of **Mixertech** mixers is mainly limited to the geared driving motor, however, the periodic checking of mounting bolts and fixing grub screws is advised.

Geared Motor

To ensure adequate cooling, deposits of dirt and dust on the surfaces of the units must be removed at frequent intervals. Particular attention should be paid to the motor by removing all deposits from between the motor cooling fins and also from the air intake on the fan guard.

To ensure correct performance, highest efficiency and long life, it is essential that the lubricating oil be maintained at the correct level. The recommended grade of oil must be used at all times, since the use of unsuitable oil may result in excessive temperature rise, loss of efficiency and consequent damage to gears and bearings.

The lubricating oil level should be checked at regular intervals. We recommend that the first oil change should be carried our after approximately 500 hours initial operation and thereafter. Under normal operating conditions the oil should be changed every 10,000 operating hours. If however, a synthetic lubricant is used, then this period of time can be extended to 20,000 hours or alternatively four years maximum. In applications where arduous operating conditions exist, the lubricant should be changed at more frequent intervals. Grease packed bearings should be cleaned and re-greased every 10,000 hours, care being taken that only approximately 40% of the free volume of the bearing is filled with grease in order to avoid overheating of the bearing.

Whenever the lubricating oil is changed it is preferable to dismantle and thoroughly clean the gear case, gear wheels and bearings. After dismantling, the component parts of the gear unit should be thoroughly cleaned with flushing oil or cleaning benzine and all gear case joints should be cleaned to ensure that all traces of the original sealing compound are removed. Any foreign matter and the cleaning fluid should be removed from the gear unit bearings and gear wheels. The bearings should be re-greased immediately after cleaning and drying. When re-assembling, all mating

Bredgar Road, Gillingham, Kent, ME8 6PN
Tel: 01634 386683 e.mail: sales @ mixertech.co.uk
Fax: 01634 386684 Internet: www.mixertech.co.uk

Surfaces of the gear case must be free from oil and grease and coated with an oil resistant sealing compound.

IMPORTANT

When the recommended lubricate is not available, it is permissible to use a lubricant having similar characteristics, but we do not recommend that the lubricants of difference manufacture be mixed. Under no circumstances should a synthetic lubricant be mixed with one having a mineral base.

Bredgar Road, Gillingham, Kent, ME8 6PN
Tel: 01634 386683 e.mail: sales @ mixertech.co.uk
Fax: 01634 386684 Internet: www.mixertech.co.uk

Gearboxes are filled prior to despatch with correct quantity and grade of lubricating oil (or grease where specified).

Important

Before putting the unit into service, change the closing plug in the highest position for the breather plug supplied.

Electrical Connections

Care should be taken to connect the motor correctly in accordance with the information contained on the motor data plate and the circuit diagram contained in the motor terminal box. The motor starter should incorporate an overload device to protect the windings against damage which, could otherwise result from overload or failure of one or more phases of the electrical supply.

This is particularly important in cases where the motor starter windings are not provided with built in temperature detectors connected to suitable overriding control gear. In the case of motors controlled by Star/Delta starters, the line voltage must correspond to the Delta voltage as indicated on the motor data plate. Motors rated up to 4 kW are suitable for direct on line starting if local regulations permit. Care should be taken at all times to ensure adequate ventilation of the motor.

IMPORTANT

1. **PROPELLER SHOULD ROTATE IN A CLOCKWISE (DOWN THRUST) DIRECTION (VIEWED FROM TOP DRIVE END).**

2. **UNIT SHOULD NOT BE RUN WHILE FILLING OR EMPTYING VESSEL UNLESS STABILIZER IS FITTED.**

Bredgar Road, Gillingham, Kent, ME8 6PN
Tel: 01634 386683 e.mail: sales @ mixertech.co.uk
Fax: 01634 386684 Internet: www.mixertech.co.uk

Trouble Shooting Tips

Your Mixertech mixer drive will perform satisfactorily if the following suggestions are carefully carried out.

It is estimated that approximately 98 percent of gear reduction failures can be attributed to improper lubrication, misapplication and misalignment.

Improper lubrication causes a high percentage of gear reduction unit failures. Too frequently speed reducers are started up without any lubricant at all. Conversely, units are sometimes filled to a higher oil level than specified in the belief that better lubrication is obtained. This higher oil level usually results in more of the input power going in to churning of the oil, creating excessive temperatures with detrimental results to the bearings and gearing. Insufficient lubrication causes the same results.

Gear failure due to overload is a broad and varied area of misapplication. The nature of load (input torque, output torque, duration of operating cycle , shocks, speed, acceleration, etc.) determines the gear unit sizing and other design criteria. Generally, a mixer drive must be larger than the torque output capability of the prime mover would indicate.

A gearbox service factor compensates for varying severity of application conditions by providing a higher nominal power rating which in effect increases the size of the gear unit. If there is any question in the user's mind that the actual service conditions may be more severe than originally anticipated, it is recommended that this information be communicated to the mixer supplier before start- up. Often there are remedies that can be suggested before a mixer unit is damaged by overload, but none are effective after severe damage occurred.

Bredgar Road, Gillingham, Kent, ME8 6PN
Tel: 01634 386683 e.mail: sales @ mixertech.co.uk
Fax: 01634 386684 Internet: www.mixertech.co.uk

Motors and other prime movers should be analysed while driving the mixer unit under fully loaded conditions to determine that the prime mover is not overloaded and thus putting out more than rated torque. If it is determined that overload does exist, the unit should be stopped and steps taken to either remove the overload or contact Mixertech to determine suitability of the gear drive under observed conditions.

Once the mixer has been delivered to site and installed, check the following items:-

This is known as '**RAMBO'**

1. **Rotation** - Is the mixer going around in the correct direction.

2. **Assembly** - Is the mixer assembled correctly, especially the impeller - check the GA drawing

3. **Mounting Arrangement** - Check the gearbox is level and the shaft is vertical.

4. **Bolting** - Are all bolts torqued to the correct readings.

5. **Oil** - Check oil level and grade in gearbox.

Once these simple five steps have been completed hot commissioning can commence.

If during hot commissioning problems occur, check the following trouble shooting charts for possible causes.

Bredgar Road, Gillingham, Kent, ME8 6PN
Tel: 01634 386683 e.mail: sales @ mixertech.co.uk
Fax: 01634 386684 Internet: www.mixertech.co.uk

Problem: The electrical motor constantly trips out or is running at a high temperature. **Note**: Most motors are to Class F, temperature will rise which gives an operating temperature to 100 degrees C. Direct sunlight and high ambient temperatures could cause this to rise by as much as 15 degrees.

Inspection	Action
Check Tank	Check number and sizes of baffles, also proximity of impeller to tank bottom.
Sample Tank Contents	Check specific gravity of tank contents.
Gearbox	Is unit free to rotate? Remove motor Fan cover and rotate by hand. If answer is No - then see ' Gearbox won't rotate'
Check Rotation	See direction arrow on nameplate.
Check Oil	Remove and refill with correct grade of oil and grease.
Check Oil Level	Use dipstick or oil level plug. Top up if required.
Check Breather	Clean with solvent or paraffin.
Check Impeller	Remove any debris. Measure diameter tip to tip and check with GA drawing.

Bredgar Road, Gillingham, Kent, ME8 6PN
Tel: 01634 386683 e.mail: sales @ mixertech.co.uk
Fax: 01634 386684 Internet: www.mixertech.co.uk

Check Speed of Rotation	Count number of revolutions per Minute of output shaft and check nameplate for same.
Check Gearbox Mounting	Release holding down bolts and re-shim to level gearbox.
Check Input Coupling	Disconnect motor. Realign as required.
Check oil Seals	Oil seals must be grease packed . High temperatures will cause seals to crack.
Switch Gear	Check overload settings.
Motor in Direct Sunlight.	Shade motor - do not cover - allow for good ventilation.

Bredgar Road, Gillingham, Kent, ME8 6PN
Tel: 01634 386683 e.mail: sales @ mixertech.co.uk
Fax: 01634 386684 Internet: www.mixertech.co.uk

Problem: Gearbox won't rotate or is difficult to turn. Gearbox should be free to rotate by hand , they do not require a running-in period.

Inspection	Action
Check Gearbox Mounting	If gearbox is incorrectly bolted down then the casing can be twisted thus misaligning bearings and gears.
Bearings	Remove cover plates, check bearings for wear or obstructions. Replace as necessary . Check end float in workshop.
Gears	Remove inspection cover, if worn return to workshop for repair. Check backlash If excessive return to workshop for repair.
Check Gearbox Internals	Corrosion of bearings and gears is possible after long storage. Return to workshop for overhaul. Remove any mud or sand. Return to workshop for overhaul. Modify installation to prevent ingress of solids.
Check Stuffing Box.	Slacken glandplate. Back of packing.

Bredgar Road, Gillingham, Kent, ME8 6PN
Tel: 01634 386683 e.mail: sales @ mixertech.co.uk
Fax: 01634 386684 Internet: www.mixertech.co.uk

Problem: Gearbox leaks oil - oil at high temperature is almost impossible to seal. It can weep through gearbox casings, out of breathers and at shaft oil seals. The mess this can make is usually out of all proportion to the amount actually lost. Good house-keeping is required to remove any surface deposits.

Inspection	Action
Drive Output shaft	Has recommended oil level been exceeded. Check oil level in gearbox, when stationary.
Is breather clean and open	A dirty blocked breather will not allow the hot air in the gearbox to escape. This will pressurize box and force oil out. Clean breather in paraffin or solvent.
Check Housings and Caps	Tighten bolts. If it still persists apply joint sealer - **do not fit gaskets.** End caps and body joints are machined surfaces and additional packing will alter gearbox tolerances, end float etc.
Check Oil Seals	Replace if worn. Check shaft for damage. Polish if necessary.
Check Housing Joint	Check oil level, reduce if necessary.

Bredgar Road, Gillingham, Kent, ME8 6PN
Tel: 01634 386683 e.mail: sales @ mixertech.co.uk
Fax: 01634 386684 Internet: www.mixertech.co.uk

Problem: Gearbox is running hot. Although heat can be a sign of wear, it need not always be true. Gearbox temperatures normally rise by up to 80 degrees C and the final operating temperature can be over 100 degrees C. The gearbox will operate without problems at this temperature and higher provided the correct lubrication is supplied and changed at the prescribed intervals. However, if sudden or unexpected temperature increase occurs check the following:-

Inspection	Action
Is oil level low	Check oil level in gearbox.
Check Breather	Breather must be open and clean.
Check oil seal	Output shaft bearing and oil seal are grease lubricated . Re-lubricate and check oil seal for damage.
Oil Grade	Check grade. Flush box and refill with correct lubricant.
Oil quality and condition	Constant running at high temperatures causes rapid breakdown of lubricant. Check to see if oil has oxidized, dirty or contains sludge. Flush box and refill.
Check input coupling alignment	Disconnect coupling and realign.
Check bearing adjustment.	Bearings must not be pinched or Binding. Adjust to correct end float. All shafts must spin freely when disconnected from load.

MIXERTECH LIMITED

Bredgar Road, Gillingham, Kent, ME8 6PN
Tel: 01634 386683 e.mail: sales @ mixertech.co.uk
Fax: 01634 386684 Internet: www.mixertech.co.uk

Problem: Mixer vibrates or is rocking - because a mixer is rotating equipment it will vibrate and rock. However, excessive movement is detrimental to the equipment and could cause premature failure.

Inspection	Action
Check Impellers	Tighten bolts if required. Check for correct installation.
Check holding down bolts.	Tighten bolts on mixer bridge and baseplate.
Check foundation steelwork	Stiffen or brace steelwork.
Check shaft.	Is it straight? Is it vertical? Drop plumbline from coupling.
Check output coupling	Is it fitted correctly? Remove burrs And sharp edges - tighten coupling bolts.
Critical speed	Refer to supply for design calculations. Reduce speed to 30% below critical speed.
Steady bearing (if fitted)	Check for wear and for slack bolts.
Liquid level	Is mixer designed to operate at varying liquid levels. Check stabilizers on blades. Limit variation.

Bredgar Road, Gillingham, Kent, ME8 6PN
Tel: 01634 386683 e.mail: sales @ mixertech.co.uk
Fax: 01634 386684 Internet: www.mixertech.co.uk

Problem: Mixer makes a noise - a mixer is a rotating piece of equipment and as such will generate noise. The noise level will normally be 85 decibels at 1 metre which will be consistent. Beware random noise or knocks and high pitch sounds.

Inspection	Action
Check motor fan cowling	Re-adjust as necessary.
Check Bearings	Replace or lubricate
Check gears	Adjust or replace
Check gear casing	Remove any debris found and refill With correct grade of lubricant. Remove rust and make necessary provision to prevent entrance of water.
Check tank contents	Remove any timber, hard hats etc.

Operating Instructions

BA G298 EN 03.00

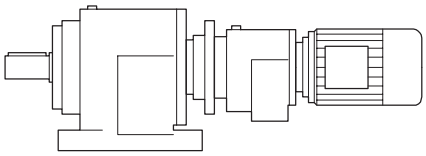
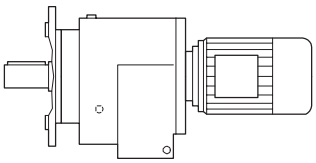
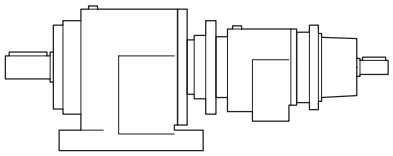
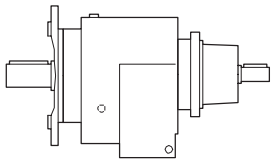

MOTOX®-N

Helical gear units

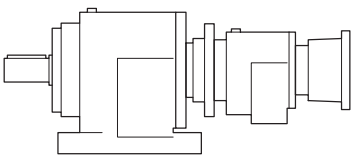
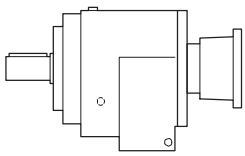

and

gear motors

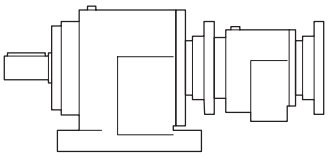
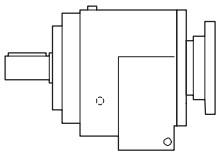
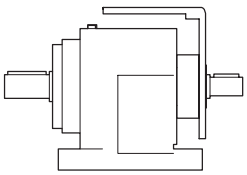

FLENDER
TÜBINGEN

FLENDER TÜBINGEN GMBH · Bahnhofstr. 40-44 · D-72072 Tübingen
Tel. 07071/707-0 · Telefax 07071/707-400 · www.flender.com
A company of A. Friedr. Flender AG

Contents

1. General notes

1.1 General

These Operating Instructions constitute part of the gear unit shipment and should be kept in the immediate vicinity of the gear unit at all times.

Only a precise knowledge of the Operating Instructions will ensure trouble-free operation of the drive by avoiding operating errors and incorrect usage. It is therefore in the interest of the operator that the Operating Instructions are read, understood and observed in all respects by the persons responsible for handling, installation and operation.

Note: We accept no liability for any damage or malfunction resulting from non-observance of the Operating Instructions.

The drives described here are manufactured in accordance with the latest technology at the time of these Operating Instructions going into print.

In the interest of further development, we reserve the right to introduce modifications to the individual subassemblies and accessories which, while retaining the essential features, can be regarded as desirable to increase their efficiency and safety.

Alterations or additions of these Operating Instructions may be done exceptionally by us only; otherwise complete liability will be cancelled.

Note: For couplings, motors, brake motors and additional features of motors (external fan, back stop, encoder system, etc.) please observe further Operating Instructions supplied with shipment (e.g.: BA M295, BA B295, N-R 430, etc.).
For special designs of drives and their optional features the particular contractual agreements and technical documentation, e.g. special dimension sheet, etc. are effective in addition to these Operating Instructions.

Please contact our works listed below in respect of all technical queries

FLENDER TÜBINGEN GMBH

Postfach 1709 · D-72007 Tübingen

Bahnhofstr. 40-44 · D-72072 Tübingen

Tel. (+49) 07071/707-0

Fax (+49) 07071/707-400

Internet: http://www.flender.com

or one of our service branches which are listed in Section 11. “Spare parts stock, service addresses”.

1.2 Proper usage

The **MOTOX®-N drives** dealt with in these Operating Instructions have been developed for as conveyor drive, e.g. monorails, in material handling or use in general engineering. If not otherwise agreed the drives are suitable **for use in machines and plants in industrial areas**.

The drives are only designed for the field of application as specified in Section 3. “Technical data”. The drives may not be operated outside the given performance limits. Operating conditions which differ from those stated will require new contractual agreements.

2. Safety notes

2.1 Notes and symbols in the Operating Instructions

Instructions in the Operating Instructions which concern operating safety are emphasized as follows:

⚠ This symbol draws attention to safety measures to prevent **personal injury**.

Attention! This symbol draws attention to the safety measures which must be observed to prevent **damage to the gear unit**.

Note: This note draws attention to general **operating notes** which should be especially observed.

2.2 Safety notes

- The gear unit is constructed in accordance with the latest technology and is reliable in the condition as shipped. Unauthorized modifications which impair its reliability are not permissible. This also applies to guards which are fitted as protection against accidental contact.
- The gear unit may only be used and operated within the scope of the conditions specified in the contract of performance and supply.
- The operator should ensure that the persons entrusted with installation, operation, care and maintenance have read and understood the Operating Instructions and observe them in all respects in order to:
  - Prevent hazard to the life and limb of the user and third parties.
  - Ensure the reliability of the gear unit.
  - Prevent failure and environmental pollution due to incorrect handling.
- The drive unit may only be operated, serviced and repaired by authorized, trained and properly instructed personnel. Definition for trained personnel see e.g. IEC 364.
- All work should be carried out carefully with the safety aspect in mind.
- Notes affixed to drive units, such as rating plate, direction of rotation arrows, etc., must be observed. They must be kept free from paint and dirt. Missing plates must be replaced.
- All work on the gear unit may only be carried out when it is stationary.
  The drive unit must be secured to prevent accidental startup (e.g. by locking the key switch or by removing the fuses in the power supply). A notice should be displayed at the switch-on point stating that work is in progress on the gear unit.
- The relevant regulations concerning industrial safety and pollution control should be observed during handling, installation, operation, care and maintenance.
- Rotating parts, such as couplings, gear wheels or belt drives must be protected by means of suitable guards to prevent accidental contact.
- The drive unit should be shut off at once if changes in the gear unit are detected during operation, such as increased operating temperature or a change in gear unit noises.
- During installation of the gear unit in devices or systems, the manufacturer of the device or system is obliged to incorporate the requirements, notes and descriptions contained in these Operating Instructions in his own Operating Instructions.
- On the occasion of oil changes, the old oil should be collected in a suitable receptacle. Any pools of oil which have occured should be removed at once with an oil binding agent.
  Very dirty and oil-soaked cleaning rags should be kept in suitable containers.
  The oil, the oil binding agent and the cleaning rags should be disposed of in accordance with the relevant pollution control requirements.

3. Technical data

3.1 General technical data

The rating plate of the gear units or gear motors contains the most essential technical data. These data and the contractual agreements for the drives define the limits of its proper use.
On gear motors normally one rating plate, attached to the motor, is used for the complete drive.
In some cases separate rating plates are used on the gear unit and the motor.

Examples: Rating plate of gear motor

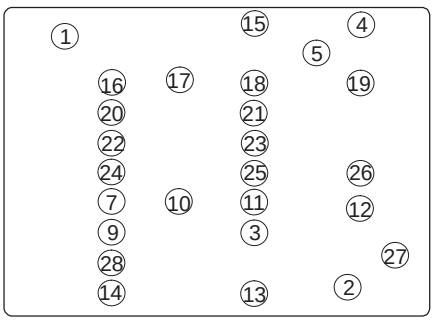

Rating plate of gear unit

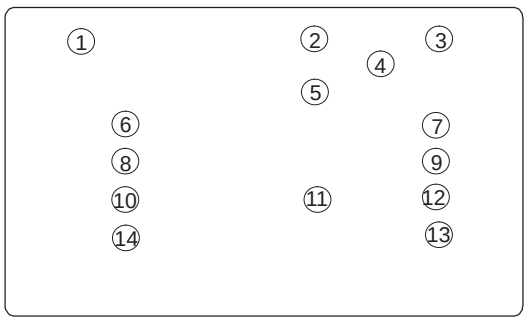

① Company logo
② Date of manufacture (coded, e.g. U01)
③ Weight m [kg] (only if > 30kg)
④ Order No. / consecutive No.
⑤ Type - Size
⑥ Power rating: T_2 [Nm]
⑦ Type of construction
⑧ Total ratio i
⑨ Speed n_2 [min^{-1}] (min^{-1}=1/60s)
⑩ Oil grade, e.g.:
CLP-oil DIN 51517/3 (mineral oil)
or PGLP-oil (synthetic oil)
⑪ Oil viscosity: ISO VG-class to
DIN 51519 / ISO 3448
⑫ Oil quantity [l] (1l=1dm^3 ≈1kg)
⑬ Free field for additional data
e.g. commission number (customer's request)
⑭ max. ambient temperature TU_{max} [°C]
⑮ Phase number and type of current of the motor
(z.B.: 3∼ Mot. oder 1∼ Mot.)
⑯ Connecting symbol to DIN 40900 T6/IEC617-6
⑰ Rated voltage U [V]
⑱ Rated current I [A]
⑲ Rated frequency f [Hz]
⑳ Rated speed n [min^{-1}] (min^{-1}=1/60s)
㉑ Rated power P [kW]
㉒ Duty type (if ≠ S1)
㉓ Power factor cos φ
㉔ Type of protection to IEC 60034-5 or IEC 529
㉕ Thermal class Th. Cl.
㉖ standards used as a basis
e.g.: IEC 60034, EN 60034 or VDE 0530
㉗ EC symbol (CE) or other marking
(CSA, NRTL/C, UL, etc.) if applicable
㉘ Brake data

Symbols (IEC 617-2): ⏢ = brake
⊥⊥⊥ = coupling, clutch

Data on the weight and sound pressure of the various drives will be found under 3.4 and 3.5.

Further technical data will be found in the drawings and the gear unit documentation.

3.2 Mounting positions

- The drives may only be operated in the mounting position specified on the rating plate. This will ensure the correct quantity of lubricant.
- The designations of the mounting positon correspond to IEC 60034-7 (Code I).

Marking:

 Oil level

 Housing ventilation

 Oil drain plug

V Size 38 gear units are standard-fitted with a screw plug at point ”V”.

* on opposite side

② 2-stage gear units ③ 3-stage gear units

3.2.1 Two- and three-stage gear units and gear motors

- D/Z 38 - D/Z 88

D/Z **B3** (**IM B3**)

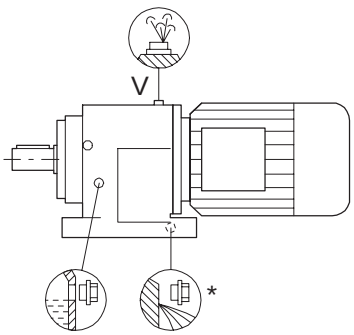

D/Z **B8** (**IM B8**)

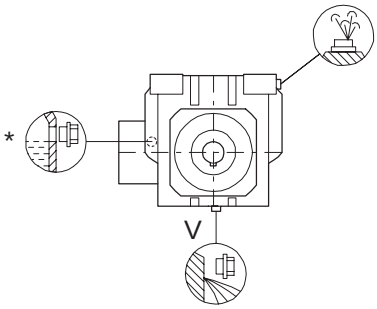

D/Z **B7** (**IM B7**)

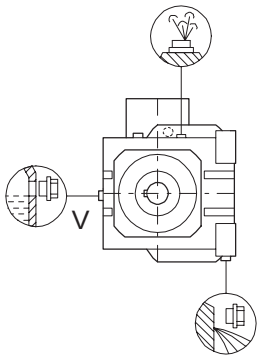

D/Z **B6** (**IM B6**)

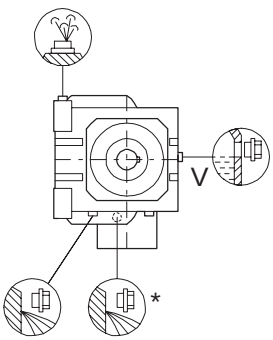

D/Z **V5** (**IM V5**)

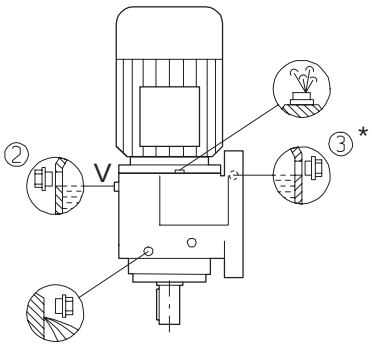

D/Z **V6** (**IM V5**)

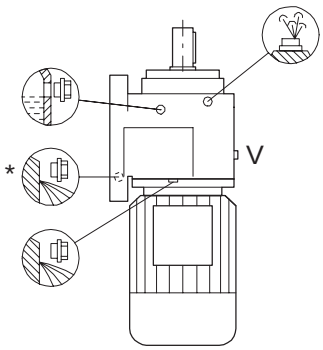

- D/Z 108 - D/Z 168

D/Z **B3** (**IM B3**)

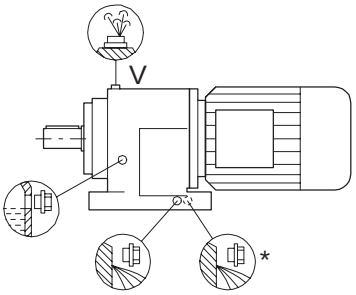

D/Z **B8** (**IM B8**)

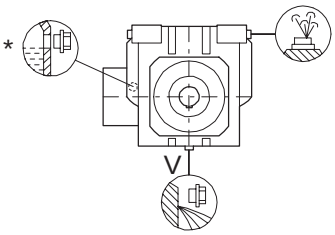

D/Z **B7** (**IM B7**)

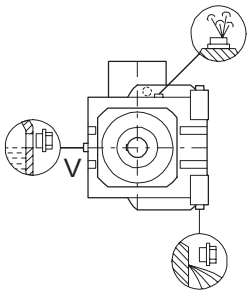

D/Z **B6** (**IM B6**)

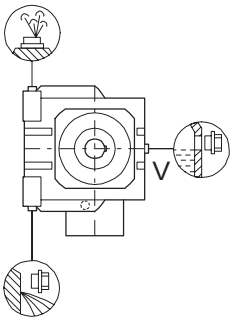

D/Z **V5** (**IM V5**)

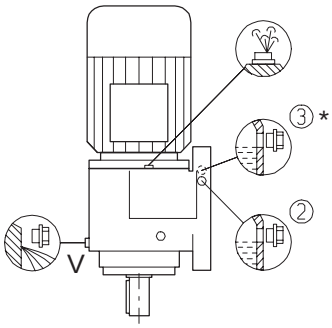

D/Z **V6** (**IM V5**)

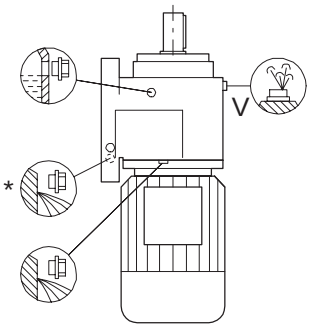

- D./Z. 38 - D./Z. 88

DF/ZF **B5** (**IM B5**)
DZ/ZZ **B14** (**IM B14**)

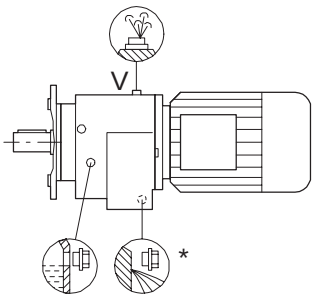

DF/ZF **V1** (**IM V1**)
DZ/ZZ **V18** (**IM V18**)

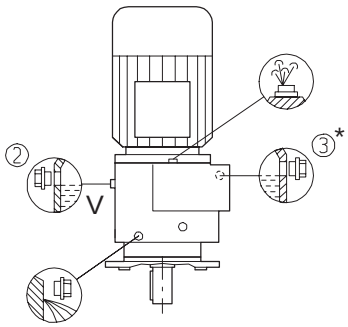

DF/ZF **V3** (**IM V1**)
DZ/ZZ **V19** (**IM V19**)

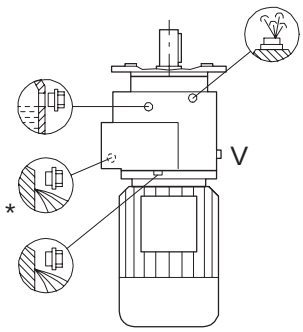

DB/ZB **B3/B5** (**IM B3/B5**)

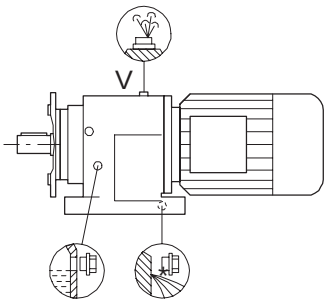

DB/ZB **V1/V5** (**IM V1/V5**)

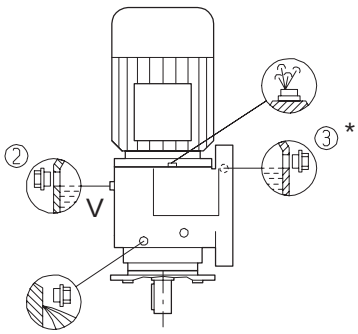

DB/ZB **V3/V6** (**IM V3/V6**)

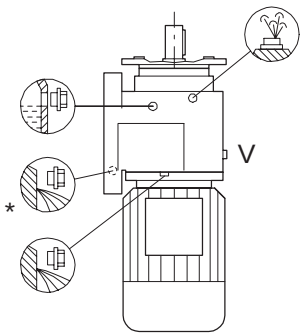

- D./Z. 108 - D./Z. 168

DF/ZF **B5** (**IM B5**)
DZ/ZZ **B14** (**IM B14**)

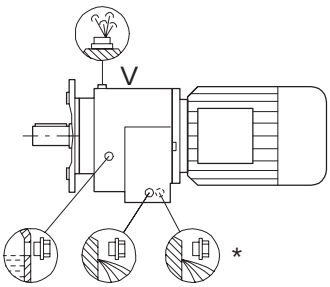

DF/ZF **V1** (**IM V1**)
DZ/ZZ **V18** (**IM V18**)

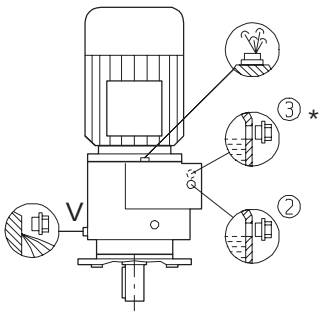

DF/ZF **V3** (**IM V1**)
DZ/ZZ **V19** (**IM V19**)

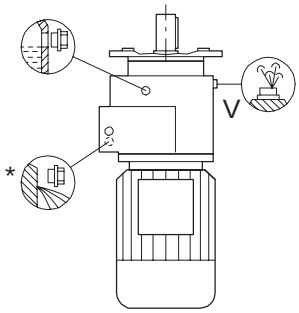

DB/ZB **B3/B5** (**IM B3/B5**)

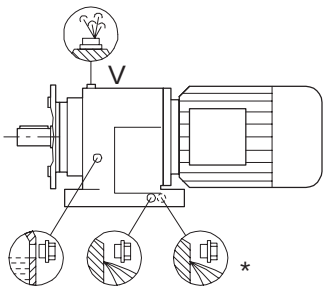

DB/ZB **V1/V5** (**IM V1/V5**)

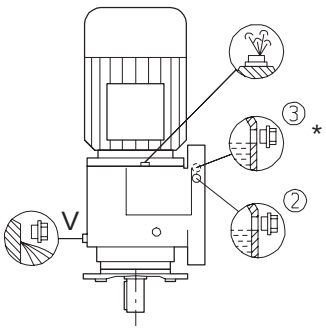

DB/ZB **V3/V6** (**IM V3/V6**)

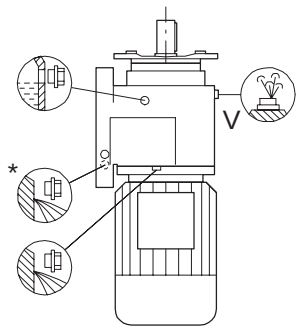

3.2.2 Tandem gear unit - compound helical gear unit

horizontal operating position

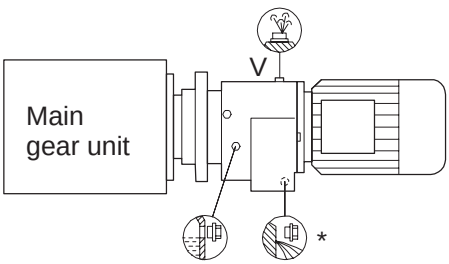

vertical operating position

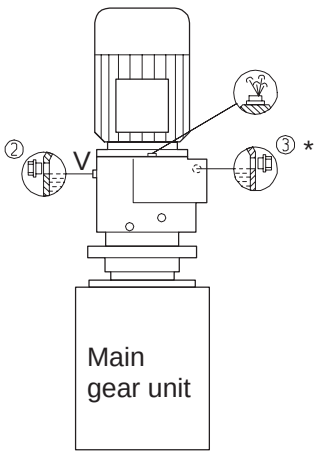

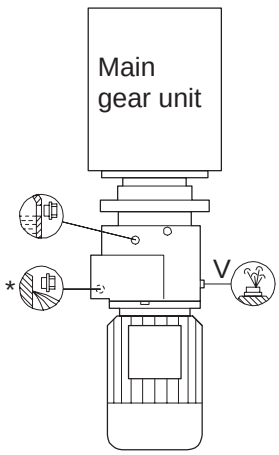

The type Z.28 is fitted as standard with three screw plugs.

Attention! **In horizontal operating position, the housing recess of the 2. gear unit in general points downwards.**

3.3 Oil quantities

The exact oil quantities are specified on the rating plates of the drives.

Attention! **The gear units should always be filled up to the oil level (see Section 7. “Startup”).**

Note: The quantities in litres listed in the following are reference values.
Because of the different transmission ratios per gear unit type carefully calculated mean values, which e.g. serve for purposes of stocking, lubricant provision, etc., are specified.

3.3.1 Two- and three-stage gear units and gear motors

Type	Mounting position								
	B3 B3/B5	B5 B14	B6	B7	B8	V1 V18	V3 V19	V5 V1/V5	V6 V3/V6
Z. 38	0.5	0.5	0.6	0.6	0.6	0.7	1.2	0.7	1.1
Z. 48	1.1	1	1.6	1.3	1.5	1.8	2.4	1.9	2.4
Z. 68	1.8	1.7	2.7	2.3	2.5	3	4.1	3.2	4.1
Z. 88	4.1	3.7	6.1	5.3	5.7	6.8	8.8	7.5	8.8
Z. 108	6.7	5.3	10.5	9.3	8.6	12.8	14	13.2	13.6
Z. 128	9	6.4	16	14.1	13.2	17.4	20.7	19.9	20.9
Z. 148	12.2	9.9	20.8	18.3	26.9	23.9	27.7	25.7	27.4
Z. 168	18.8	15.3	34.8	30.1	32.1	43.8	31.1	45.7	41.7
D. 38	0.5	0.5	0.6	0.6	0.6	0.9	1.1	0.9	1.1
D. 48	1.1	1	1.5	1.4	1.5	2.3	2.4	2.4	2.4
D. 68	1.7	1.6	2.6	2.4	2.6	3.9	4	4	4
D. 88	4	3.6	5.9	5.4	5.9	8.7	8.9	9.3	8.9
D. 108	6.5	5.1	10.3	9.5	9	15.3	14.2	15.6	13.7
D. 128	8.7	6.1	15.8	14.8	14.1	22.2	21.3	24.4	21.5
D. 148	11.7	9.4	20.4	19.1	23.4	30.6	28.2	32.2	27.9
D. 168	18.1	14.6	34.1	31.2	33.8	53	43.7	54.4	42.2

3.3.2 Tandem gear unit - compound helical gear unit

Attention! **In horizontal operating position, the housing recess of the 2. gear unit in general points downwards.**

Type	Mounting position								
	B3 B3/B5	B5 B14	B6	B7	B8	V1 V18	V3 V19	V5 V3/V5	V6 V3/V6
Z.38 - Z28	0.5+0.3 **0.8**	0.5+0.3 **0.8**	0.6+0.3 **0.9**	0.6+0.3 **0.9**	0.6+0.3 **0.9**	0.7+0.8 **1.5**	1.2+0.8 **2.0**	0.7+0.8 **1.5**	1.1+0.8 **1.9**
Z.48 - Z28	1.1+0.3 **1.4**	1.0+0.3 **1.3**	1.6+0.3 **1.9**	1.3+0.3 **1.6**	1.5+0.3 **1.8**	1.8+0.8 **2.6**	2.4+0.8 **3.2**	1.9+0.8 **2.7**	2.4+0.8 **3.2**
Z.68 - Z28	1.8+0.3 **2.1**	1.8+0.3 **2.1**	2.7+0.3 **3.0**	2.3+0.3 **2.6**	2.5+0.3 **2.8**	3.0+0.8 **3.8**	4.1+0.8 **4.9**	3.2+0.8 **4.0**	4.1+0.8 **4.9**
Z.68 - Z38	1.8+0.5 **2.3**	1.8+0.5 **2.3**	2.7+0.5 **3.2**	2.3+.05 **2.8**	2.5+0.5 **3.0**	3.0+0.7 **3.7**	4.1+1.2 **5.3**	3.2+0.7 **3.9**	4.1+1.2 **5.3**
D.38 - Z28	0.5+0.3 **0.8**	0.5+0.3 **0.8**	0.6+0.3 **0.9**	0.6+0.3 **0.9**	0.6+0.3 **0.9**	0.9+0.8 **1.7**	1.1+0.8 **1.9**	0.9+0.8 **1.7**	1.1+0.8 **1.9**
D.48 - Z28	1.1+0.3 **1.4**	1.0+0.3 **1.3**	1.5+0.3 **1.8**	1.4+0.3 **1.7**	1.5+0.3 **1.8**	2.3+0.8 **3.1**	2.4+0.8 **3.2**	2.4+0.8 **3.2**	2.4+0.8 **3.2**
D.68 - Z28	1.7+0.3 **2.0**	1.6+0.3 **1.9**	2.6+0.3 **2.9**	2.4+0.3 **2.7**	2.6+0.3 **2.9**	3.9+0.8 **4.7**	4.0+0.8 **4.8**	4.0+0.8 **4.8**	4.0+0.8 **4.8**
D.68 - Z38	1.7+0.5 **2.2**	1.6+0.5 **2.1**	2.6+0.5 **3.1**	2.4+0.5 **2.9**	2.6+0.5 **3.1**	3.9+0.7 **4.6**	4.0+1.2 **5.2**	4.0+0.7 **4.7**	4.0+1.2 **5.2**
D.68 - D38	1.7+0.5 **2.2**	1.6+0.5 **2.1**	2.6+0.5 **3.1**	2.4+0.5 **2.9**	2.6+0.5 **3.1**	3.9+0.9 **4.8**	4.0+1.1 **5.1**	4.0+0.9 **4.9**	4.0+1.1 **5.1**
D.88 - Z28	4.0+0.3 **4.3**	3.6+0.3 **3.9**	5.9+0.3 **6.2**	5.4+0.3 **5.7**	5.9+0.3 **6.2**	8.7+0.8 **9.5**	8.9+0.8 **9.7**	9.3+0.8 **10.1**	8.9+0.8 **9.7**
D.88 - Z38	4.0+0.5 **4.5**	3.6+0.5 **4.1**	5.9+0.5 **6.4**	5.4+0.5 **5.9**	5.9+0.5 **6.4**	8.7+0.7 **9.4**	8.9+1.2 **10.1**	9.3+0.7 **10.0**	8.9+1.2 **10.1**
D.88 - D38	4.0+0.5 **4.5**	3.6+0.5 **4.1**	5.9+0.5 **6.4**	5.4+0.5 **5.9**	5.9+0.5 **6.4**	8.7+0.9 **9.6**	8.9+1.1 **10.0**	9.3+0.9 **10.2**	8.9+1.1 **10.0**
D.108 - Z28	6.5+0.3 **6.8**	5.1+0.3 **5.4**	10.3+0.3 **10.6**	9.5+0.3 **9.8**	9.0+0.3 **9.3**	15.3+0.8 **16.1**	14.2+0.8 **15.0**	15.6+0.8 **16.4**	13.7+0.8 **14.5**
D.108 - Z38	6.5+0.5 **7.0**	5.1+0.5 **5.6**	10.3+0.5 **10.8**	9.5+0.5 **10.1**	9.0+0.5 **9.5**	15.3+0.7 **16.0**	14.2+1.2 **15.4**	15.6+0.7 **16.3**	13.7+1.2 **14.9**
D.108 - D38	6.5+0.5 **7.0**	5.1+0.5 **5.6**	10.3+0.5 **10.8**	9.5+0.5 **10.0**	9.0+0.5 **9.5**	15.2+0.9 **16.1**	14.2+1.1 **15.2**	15.6+0.9 **16.5**	13.7+1.1 **14.8**
D.128 - Z28	8.7+0.3 **9.0**	6.1+0.3 **6.4**	15.8+0.3 **16.1**	14.8+0.3 **15.1**	14.1+0.3 **14.4**	22.2+0.8 **23.0**	21.3+0.8 **22.1**	24.4+0.8 **25.2**	21.5+0.8 **22.3**
D.128 - Z38	8.7+0.5 **9.2**	6.1+0.5 **6.6**	15.8+0.5 **16.3**	14.8+0.5 **15.3**	14.1+0.5 **14.6**	22.2+0.7 **22.9**	21.3+1.2 **22.5**	24.4+0.7 **25.1**	21.5+1.2 **22.7**
D.128 - Z48	8.7+1.0 **9.7**	6.1+1.0 **7.1**	15.8+1.0 **16.8**	14.8+1.0 **15.8**	14.1+1.0 **14.1**	22.2+1.8 **24.0**	21.3+2.4 **23.7**	24.4+1.8 **26.2**	21.5+2.4 **23.9**
D.128 - D38	8.7+0.5 **9.2**	6.1+0.5 **6.6**	15.8+0.5 **16.3**	14.8+0.5 **15.3**	14.1+0.5 **14.6**	22.2+0.9 **23.1**	21.3+1.1 **22.4**	24.4+0.9 **25.3**	21.5+1.1 **22.6**
D.148 - Z38	11.7+0.5 **12.2**	9.4+0.5 **9.9**	20.4+0.5 **20.9**	19.1+0.5 **19.6**	23.4+0.5 **23.9**	30.6+0.7 **31.3**	28.2+1.2 **29.4**	32.2+0.7 **32.9**	27.9+1.2 **29.1**
D.148 - Z48	11.7+1.0 **12.7**	9.4+1.0 **10.4**	20.4+1.0 **21.4**	19.1+1.0 **20.1**	23.4+1.0 **24.4**	30.6+1.8 **32.4**	28.2+2.4 **30.6**	32.2+1.8 **34.0**	27.9+2.4 **30.3**
D.148 - D38	11.7+0.5 **12.2**	9.4+0.5 **9.9**	20.4+0.5 **20.9**	19.1+0.5 **19.6**	23.4+0.5 **23.9**	30.6+0.9 **31.5**	28.2+1.1 **29.3**	32.2+0.9 **33.1**	27.9+1.1 **29.0**
D.168 - Z48	18.1+1.0 **19.1**	14.6+1.0 **15.6**	34.1+1.0 **35.1**	31.2+1.0 **32.2**	33.8+1.0 **34.8**	53.0+1.8 **54.8**	43.7+2.4 **46.1**	54.4+1.8 **56.2**	42.2+2.4 **44.6**
D.168 - Z68	18.1+1.7 **19.8**	14.6+1.7 **16.3**	34.1+1.7 **35.8**	31.2+1.7 **32.9**	33.8+1.7 **35.5**	53.0+3.0 **56.0**	43.7+4.1 **47.8**	54.4+3.0 **57.4**	42.2+4.1 **46.3**
D.168 - D48	18.1+1.0 **19.1**	14.6+1.0 **15.6**	34.1+1.0 **35.1**	31.2+1.0 **32.2**	33.8+1.0 **34.8**	53.0+2.3 **55.3**	43.7+2.4 **46.1**	54.4+2.3 **56.7**	42.2+2.4 **44.6**

3.4 Weights

The weight of the drive is shown on the rating plate of the gear unit or the gear motor, if higher than 30 kg; it can always be found in the shipment documents.

When there are several rating plates on one drive, the value on the main gear unit is decisive.

The weight specification refers only to the condition of the product on delivery.

3.5 Sound power level

The A-qualified sound power levels L_{WA} of a selection of gear units in Figure 3.5 were determined according to DIN EN 21680 measured with testing apparatus to DIN IEC 651.

The sound is dependent upon speed, power rating and ratio.

The **MOTOX®-N-Gear Motors** are shown predominantly in the dark-coloured section Gear units with very small ratios, high power rating and high input speed may lie in the hatched range.

If no proper measuring system can be established when measuring again at the place of use, the measurement on the **FLENDER TÜBINGEN GMBH** test rigs are valid.

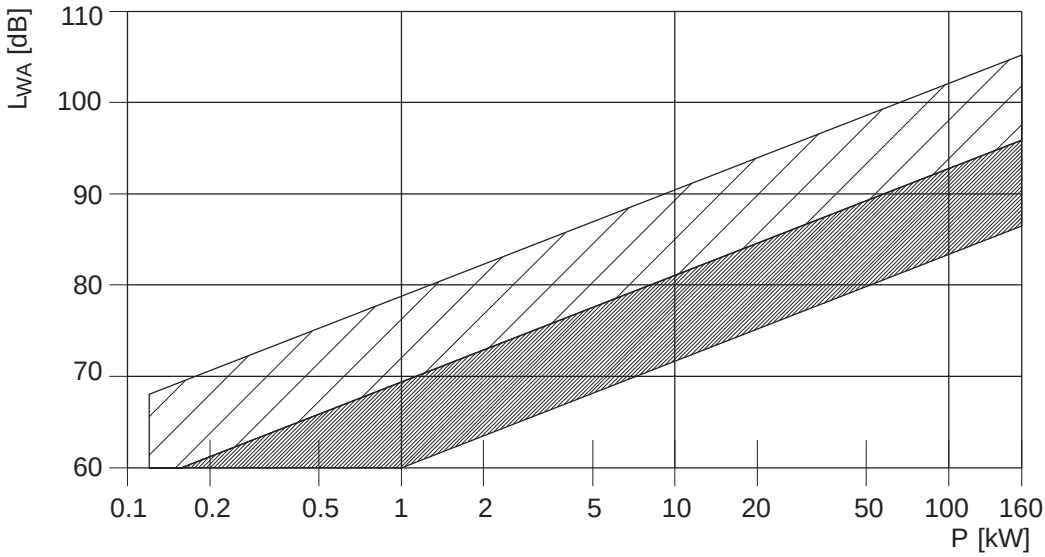

Figure 3.5

L_{WA} [dB] Sound power level

P [kW] Mechanical power rating

- External noises

Noises which are not generated by the gear unit but are emitted by the gear unit are not taken into consideration.

Noises which are emitted by input and output machines as well as by the foundation are not taken into consideration either, even if they were transmitted to that point by the gear unit.

⚠ **General guidelines concerning the influence of noise on people should be taken into consideration.**

4. Incoming goods, handling and storage

4.1 Incoming goods

The contents of the shipment are listed in the shipping documents. The shipment should be checked for completeness and shipping damage immediately on receipt. If necessary, a loss advice should be written out in the presence of the forewarder, otherwise repairing the damage without costs will not be possible.

⚠ **Damaged drives must not be put into operation.**

4.2 Handling

The drive is shipped in assembled state. Ancillary equippment (such as for example pipes and valves) are shipped packed separately.

The packing of the gear unit will differ, dependent on the method of shipment and size. The packing, unless otherwise agreed contractually, complies with **HPE Packing Guidelines**.

The symbols shown on the packing should be noted. Their significance is as follows:

This side up | Fragile Goods | Keep dry | Protect from heat | Centre of gravity | Use no hooks | Sling here

Attention! **When handling and loading and unloading of the drive, excercise special care to avoid damage due to the use of force.**

⚠ **The drive system must be attached to the transport fixture with the maximum permissible suspension weight. As a rule this is on the main gear unit.**
Check the eye-bolt provided for firm seating and, if necessary, tighten it.
The eye-bolt on the motor may be used only as auxiliary suspension, e.g. for horizontal mounting position of the motor, to transport the un- or demounted motor.

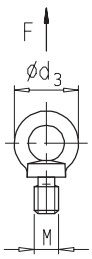

The permissible attaching weight is to be observed:

d_3 [mm]	**36**	**45**	**54**	**63**	**72**	**90**	**108**
M	**M 8**	**M 10**	**M 12**	**M 16**	**M 20**	**M 24**	**M 30**
m [kg]	140	230	340	700	1200	1800	3600

Highest load exercised by the drive to be attached in kg with tension↑ in the direction F of the screw axis.

Attention! **To ensure maximum load-bearing capacity in direction F of the lifting eye or eye bolt axis additional suitable transport means (cables or the like) must be used for transport and/or installation.**

⚠ **When attaching with several chains and ropes, two ropes must already be sufficient to support the complete load. Lifting devices such as ropes and similar should be secured against slipping.**

Attention! **The threads in the shaft ends must not be used for attaching eye bolts for handling.**

Attention! **Transport fixtures, if present, should be removed and stored or be made noneffective according to additional notes. For further transport reuse or make effective again.**

4.3 Storage

The drives should be stored in dry rooms with minimum temperature fluctuations in their positions of use on a horizontal wooden support and covered.

Attention! **The storage area must be free of vibrations (shocks) as otherwise the anti-friction bearings may be damaged.**

⚠ **It is not permissible to stack drives on top of one another.**

The gear units are provided with internal preservation, the free shaft ends and the flange surfaces are provided with a protective coating.

Note: Unless agreed to the contrary by contract, a warranty period of 6 months is given for the standard preservation. The warranty period starts to run on the date of delivery of the gear unit.

In the case of prolonged interim storage (> 6 months) check preservation and renew it, if necessary (see Section 7. “Startup”).

The contractually agreed external coating (Type, structure, colour) was carefully applied by spray painting. See 5.11 for the resistances of the coating.

Note: Do not damage the coating!
Mechanical (scratches), chemical (acids, alkaline solutions) or thermal (sparks, welding beam, heat) damage leads to corrosion and to the failure of the external protection.

Attention! **If stored in the open, the drive should be covered with special care and it should be ensured that neither moisture nor foreign matter are allowed to collect on the gear unit.**

5. Technical description

5.1 General description

The gear units are supplied as two- or three-stage helical gear units.
The gear units are suitable for the different mounting positions taking into consideration the oil level.

5.2 Housings

The gear unit grey cast iron housings are stable, vibration dampening and are designed for continuous operation.

The housings are manufactured by completely new machining processes on the most up-to-date machines, so ensuring a high centre distance accuracy and so preventing local overload of the tooth flanks. The high accuracy likewise ensures favourable bearing load and good noise characteristics.

5.3 Toothed components

The toothed gear unit components are hardened and ground. The high quality of the tooth system as well as the flank- and profile-corrected involute gearing minimizes the noise level of the gear unit and at the same time optimizes the carrying capacity of the flanks.

5.4 Lubrication

The components of the tooth system are adequately supplied with lubricant by splash lubrication. This ensures that the gear units are especially maintenance-free.

Attention! **See Section 10. “Maintenance and repair” for trouble-free operation.**

5.5 Bearings

All shafts are mounted in anti-friction bearings. Lubrication of the anti-friction bearings is effected by splash lubrication assisted by the gear wheels. Bearings which are not supplied with lubricant hereby are enclosed and grease lubricated (lifetime lubrication).

5.6 Shaft seals

Radial shaft seals at the shaft outlet to the speed reducing gear unit prevent, lubricant from the entering in the variable speed gear unit. In case of higher ambient temperatures (>40°C ... 100°C according to order agreement), shaft seal rings from temperature resistant material are used.

5.7 Cooling

The gear units do not require any additional cooling. The generously dimensioned housing surface is sufficient for dissipating the heat loss in case of free convection.

Attention! **The surface of the gear unit or the gear motor should be kept free of dirt (see Section 10. “Maintenance and repair“).**

5.8 Couplings

As a rule, flexible couplings should be provided for the input drive and output drive sides of the gear unit.

If rigid couplings or other input drive and output drive elements are used which give rise to additional radial and/or axial forces (for example gear wheels, belt pulleys, etc.), this must be agreed on by contract.

Attention! **Couplings with peripheral speeds at the outside diameter up to 30 m/s must be statically balanced. Couplings with peripheral speeds above 30 m/s require dynamic balancing.**

The special Operating Instructions should be noted for operation of the couplings.

5.9 Backstop

The gearboxes can be provided with a mechanical backstop for certain requirements. During operation, this permits rotation in the specified direction only. This direction is marked by a corresponding direction of rotation arrow.

The backstop incorporates centrifugally operated grippers. When the gear unit is rotating in the specified direction, the inner ring and the cage with the grippers rotate, the outer ring remaining stationary. From a certain speed of rotation, the grippers lift off and the back stop now operates without wear.
The backstops are lubricated ready for duty, they don't need to be serviced.

Attention! **To prevent damage to or destruction of the backstop, it is essential to ensure that the motor is not run against the locked backstop. Please observe the notes on the gear.**

5.10 Name plates

The gear unit or gear motor name plates are normally of coated aluminium foil. They are covered in a special adhesive covering foil to ensure permanent resistance to UV radiation and media of all kinds (oils, greases, salt water, cleaning materials, etc.).

The adhesives and materials are selected to ensure firm adhesion and permanent legibility even at the limits of the operational temperature range (–40°C ... +155°C).
The edges of the name plates are coated with the appropriate paint (see 5.11).

In special cases, i.e. with special specifications, rivetted or bolted metal plates are used.

5.11 Coats of paint

5.11.1 General

All coats of paint are applied carefully by spray painting in the most modern painting plants.

Note: As a precaution against misunderstandings, we would like to point out that the recommendation does not imply any release in the sense of a warranty for the quality of the paint provided by your supplier. Each paint manufacturer must warrant the quality of his product himself.

5.11.2 Paint finish

Paint system	**Plastic**	**2K-PUR**	**2K-Epoxid**
Standard colour	RAL 7011	RAL 7031	RAL 7035
Typical area of use	Standard 1-layer coat of lacquer for the internal area, in the open with roof, i.e. suitable protection against sun and continuous atmospheric influence	Standard 2-layer coat of lacquer especially for installation in the open or in case of increased demands on corrosion protection	High-quality coat of lacquer for the external area or in case of attacks by diluted acid and alkaline solution (≤5%)
Overpaintability	With plastic lacquer or synthetic resin lacquer	After preceeding grinding with: 2K-PUR lacquer 2K-Epoxy lacquer	After preceeding grinding with: 2K-PUR lacquer 2K-Epoxy lacquer 2K-AC lacquer
Chem. phys. resistance	Good resistance to cleaning agents, oil and benzine, resistant to short-time attack by diluted acid and alkaline solution (≤3%), not resistant to solvent	Excellent resistance to: oil, grease, benzine, water, sea water and cleaning agent; good resistance to atmospheric influences and diluted acid and alkaline solution (≤3%); good mechanical resistance to abrasion	Excellent resistance to weak acid and alkaline solution (≤5%), oil, grease, benzine, cooling emulsion, salt, solvent; tough and scratch-resistant coating film
Temperature resistance	–40°C ... +100°C up to 140°C for a short time	–40°C ... +150°C	–40°C ... +150°C
Remark	Standard coat of lacquer with excellent adhesive characteristics	Standard coat of lacquer for cooling tower and agitator drive or if sea water resistance below deck or similar is required	2K-Epoxy lacquer “chalks” in case of installation in the open (does not effect the quality), high gloss with good mechanical resistance

Table 5.11.2: Paint finish

5.11.3 Primed finish

Paint system	Primed	Unpainted
Standard colour	RAL 7032	-
Typical area of use	For overpainting*): adhesive agent for all common paint systems, temporary corrosion protection	For overpainting*): (adhesive agent) temporary corrosion protection
Overpaintability	Excellent with: plastic lacquer, synthetic resin lacquer, 2K-PUR lacquer, 2K-Epoxy lacquer, SH lacquer, 2K-AC lacquer	Excellent with: plastic lacquer, synthetic resin lacquer, oil paint, bitumenous paint, 2K-PUR paint 2K-Epoxy paint
Chem. phys. resistance	Good resistance to cleaning agent, to salt spraying and resistant to oil and benzine	-
Temperature resistance	–40°C ... +150°C	(–40°C ... +150°C)
Remark	Adhesive agent with excellent adhesive characteristics and good corrosion protection	Components from grey cast iron dip-primed, components from steel primed or galvanised, components from Al and plastic untreated

Table 5.11.3: Primed finish

*) On drives with a primed or painted finish the name plate and the covering foil are provided with paint-resistant foil (see 5.10). They enable painting over without further preparation, e.g. masking, etc.

After the paint coat has hardened (is at least hard to the touch) peel off the paint-resistant foil:

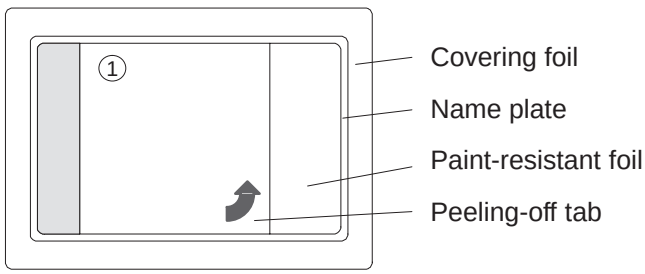

① Company logo

➡ Lift tab.

➡ Carefully peel off from one corner diagonally in the direction of the arrow (not parallel with plate).

➡ If necessary, blow off or wipe off paint splashes with a clean rag.

6. Installation

6.1 General information on installation

During installation, the safety notes in Section 2. “Safety notes” should be observed.

Installation should be carried out by specialist personnel with extreme care. Damage caused by improper execution results in the exclusion of our liability.

Right at the planning stage, it should be ensured that there is adequate space around the gear unit for installation and subsequent care and maintenance.

Adequate space for air intake should be left for drives with fan.

Attention! **The drives may overheat if positioned in strong direct sunlight. Provide appropriate protective devices such as cover, roof or similar!**

Before commencing installation, adequate hoist equipment must be provided for lifting the drives.

Attention! **No welding work must be carried out on the drive. The drives must not be used as ground points for welding work. Components of the tooth system and bearings may be destroyed by welding.**

Note: Use shoulder studs of property class 8.8 or higher for mounting the drives.

Attention! **All mounting possibilities assigned to the respective mounting position should be used.**

6.2 Drives with foot mounting

6.2.1 Foundation

The foundation must be flat.

Note: The flatness of the gear unit support must not exceed the following values:

for gear units up to size 88	≤ 0.1 mm
on gear unit size 108 and upward	≤ 0.2 mm

It should be executed in such a way that no resonance vibrations occur and no vibration can be transmitted from adjacent foundations. Steel structures on which the gear unit is installed must be torsionally rigid. They are to be designed corresponding to weight and torque, taking into account the forces acting on the gear unit.

When mounting the gear unit on a concrete foundation, using foundation blocks, suitable recesses should be provided in the foundation.

When alignment has been completed, slide rails should be grouted to the concrete foundation.

6.2.2 Installation of gear units with foot mounting

When making use of the highest possible output torque or shearing forces besides the foot mountings by studs or bolts of property class 8.8. suitable additional positive connections such as e.g. cylindrical grooved pins, dowel pins, spring type straight pins or fitting pipes should be provided. These measures are also necessary for dynamically loaded screw connections.
In some cases headed screws can't be used, due to lack of space for insertion. If in doubt, please contact us giving the type of gear.

Attention! **Do not use spring rings, serrated lock washers, spring washers or tooth lock washers, plate springs or idler pulleys as substitute for the above mentioned positive connections.**

Attention! **The gear unit housings must not be distorted when tightening the fastening screws.**

Note: See 10.2.5 for tightening torques.

Note: Gear units which require the use of a hoist due to their weight should be attached according to 4.2.

6.3 Drives with foot-/flange

The fixture of the drive unit for force and torque transmission may only be done by the flange or by means of bottom fixture in accordance with Section 6.2 in order to prevent distortion of the gear unit housings.
The second fixing option (foot or flange) is normally provided for add-on elements, e.g. safety enclosures or the like, with a dead weight of up to max. 30 % of the weight of the drive unit.

Attention! **The gear unit housings must not be distorted by the add-on elements. Likewise no forces, torques and vibrations, e.g. through the attachment of smaller auxiliary equipment and the like, must be transmitted to the drives.**

6.4 Drives with flange fixture

6.4.1 A-type flange-mounted design

For assembly option DF/ZF 128 we recommend pinning the flange size A350 to the customer's interface.

6.4.2 C-type housing-flange-mounted design

On the C-type flange-mounted housing assembly options 108-168 the customer's interface can be pinned. The output flanges are designed so that the permissible torques and radial forces can be reliably transmitted by the screw connections.

Attention! **If additional security is required, e.g. for reversing operation or with high shock loads, the provided pinhole bores can be used.**
The gear unit can also be drilled and pinned jointly with the machine. For this the listed dimensions must be adhered to.

DZ/ZZ 108

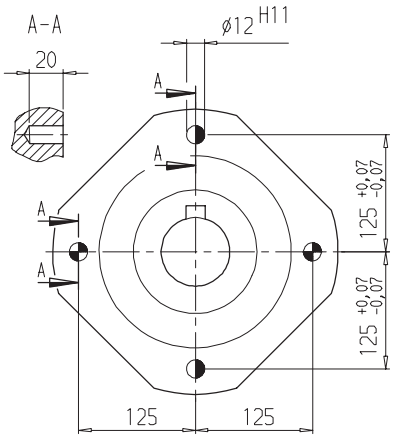

DZ/ZZ 128

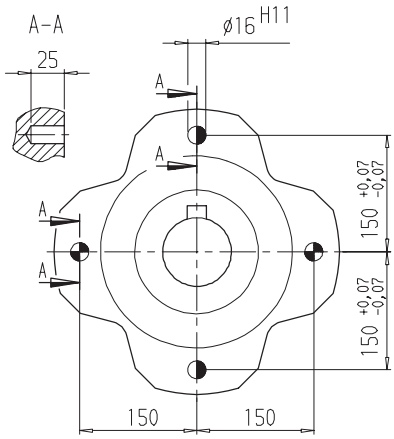

DZ/ZZ 148

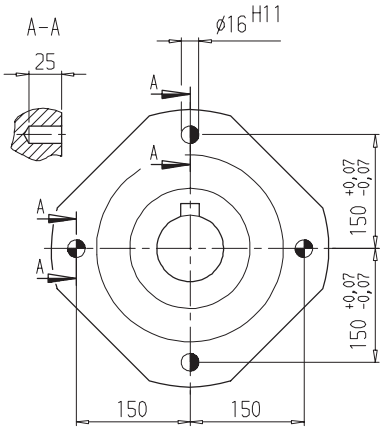

DZ/ZZ 168

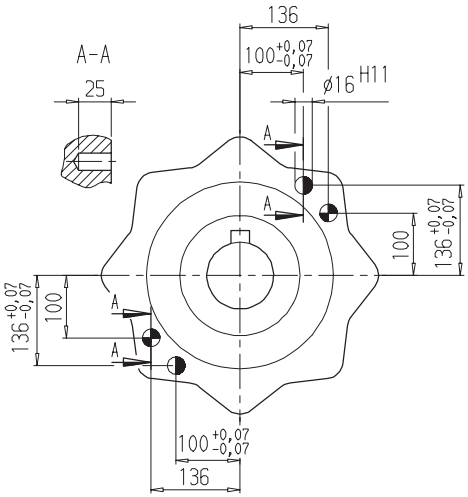

◑ Dowel pins, heavy-type, to DIN 1481: use available pinholes in the housing flange.

◕ Full-length parallel grooved pin with chamfer to DIN EN 287 40 / ISO 8740: drill connection piece and housing jointly.

Attention! **Adhere to max. drilling depth (A-A).**

6.5 Installation of input drive and output drive elements on gear unit shafts

Elements such as running wheels, chain sprockets and gear wheels, couplings and belt pulleys, etc. should be installed on the gear unit shafts using a fitting device.

Note: Deburr elements to be fitted in the bore and keyway area.
Recommendation: 0.2 x 45°

Centre bores according to DIN 332 are provided in the shaft faces which are used in this case.

Description of the assembly work

- Remove corrosion protective coating from the shaft ends and flanges with benzine or solvent, or remove protection skin if existing.

⚠ **Ensure adequate ventilation. Do not inhale vapours. Do not smoke. Explosion hazard.**

Attention! **Under any circumstances, ensure that benzine or solvent does not contact the shaft seals.**

- Fit input drive and output drive elements on the shaft ends and secure them, if necessary.

If couplings are used which are to be fitted after heating, the Operating Instructions of the coupling in question should be observed.

Attention! **Under no circumstances must the part to be installed be driven onto the shaft by hammer blows as this may cause damage to bearings, housing, shaft and circlips.**

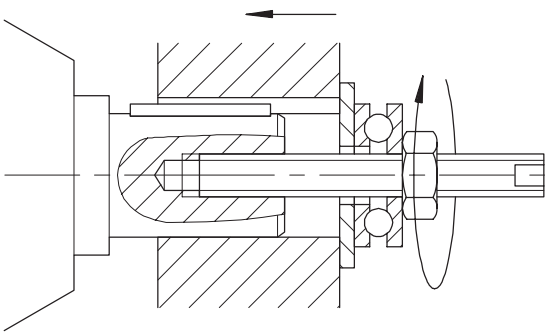

Example of a fitting device for installing couplings or hubs on gear unit or motor shaft ends.
If possible, the thrust bearing on the fitting device can be obmitted.

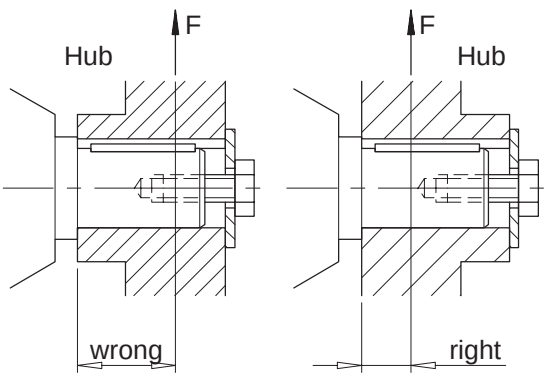

Correct assembly arrangement of running or gear wheel chain sprocket, pulley, or similar, in order to keep the load of the shaft or bearing by shearing forces as low as possible.

6.6 Attachment of standard motors

6.6.1 Attachment to bell housing with torsionally flexible coupling

Note: The special Operating Instructions should be observed for the operation of the couplings.

Description of the assembly work

- Fit coupling half Pos.556 onto the motor shaft end observing 6.5.
  Secure the coupling half against axial shifting with grub screw Pos.564.
  On motors which are balanced with a half parallel key (marked ”H”): Machine away projecting, visible portions of parallel key.

Attention! **Adhere to distance dimension z12 as shown on Table 6.6.1.**

Note: Dimension z12 applies to the standard assignment of the coupling. In case of a special assignment, the dimension should be taken from the corresponding special dimension drawing.

- Insert elastic element Pos.557 into coupling half Pos.555.
- Flange motor to coupling lantern and fasten it by means of screws Pos.505 according to the prescribed tightening torque, Table 10.2.5.

Note: In case of installation of the drive outdoors or with a higher degree of protection (≥ IP 55):
Seal flange, screws Pos.505 and plugs Pos.502 if present or inserted elements, e.g. proximity switches with sealing compound.

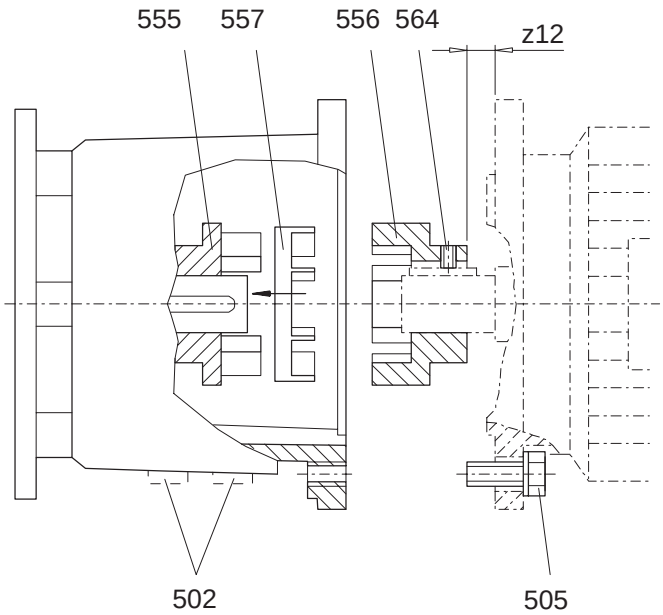

502 Plug
505 Hexagon head screw
555 Coupling half
556 Coupling half
557 Elastic element
564 Grub screw

IEC B5	80	90	100	112	132	160	180	200	225	250
z12 [mm]	15	26	30	30	45	66	59	60	90	75

NEMA TC	56C	143TC 145TC	182TC 184TC	213TC 215TC	254TC 256TC	284TC 286TC	324TC 326TC	364TC 365TC
z12 [mm]	27.5	28	36.5	45.5	50	61	71	78

Table 6.6.1: Motor size

6.6.2 Attachment to coupling lantern with clamping ring

- Remove mounting plugs Pos.502 and Pos.503.
- To fasten the clamping ring align input shaft and clamping ring of the gear unit to the mounting bores Pos.502 and 503 by rotating.
- Flange motor to coupling lantern and fasten it by means of screws Pos.505 according to the prescribed torque, Table 10.2.5.

Note: In case of installation of the drive outdoors or with a higher degree of protection (≥ IP 55):
Seal flange, screws Pos.505 and assembly plug Pos.502 and Pos.503 with sealant.

- Screw the grub screw Pos.564 onto the key Pos.563 until a light resistance is felt, then unscrew half a turn (wrench size SW1 see table 6.6.2).
- To prevent the shafts turning insert socket spanner in threaded pin, Pos.564, through bore for Pos.503.
- Tighten hexagon socket screw, Pos.561 with torque T_A (torque T_A and wrench size SW2 see table 6.6.2).
- Tighten grub screw Pos.564.
- Cover mounting bores with plugs Pos.502 and Pos.503.

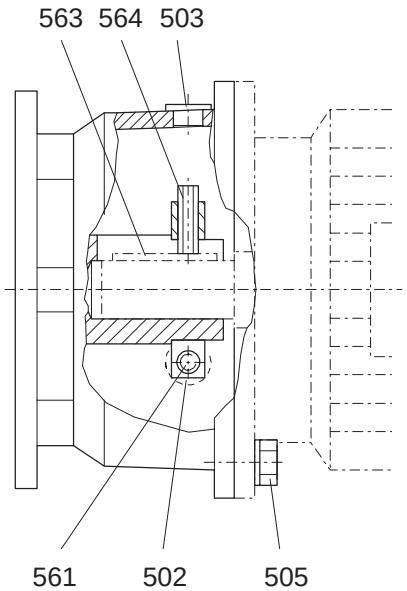

502 Mounting plug
503 Mounting plug
505 Hexagon head screw
561 Grub screw
563 Parallel key
564 Hexagon socket screw

IEC B5	**63**	**71**	**80**	**90**	**100**	**112**	**132**	**160**	**180**	**200**	**280**
T_A [Nm]	10	10	10	25	25	25	25	25	25	50	50
SW1 [mm]	2	2	2	3	3	3	3	3	3	4	4
SW2 [mm]	5	5	5	6	6	6	6	6	6	8	8

NEMA TC	**56C**	**143TC 145TC**	**182TC 184TC**	**213TC 215TC**
T_A [Nm]	10	10	25	25
SW1 [mm]	2	2	3	3
SW2 [mm]	5	5	6	6

Table 6.6.2: Motor size

6.7 Motor base plate

The motor bracket is designed for the mounting of an IEC-B3 bottom-mounted motor used primarily to power a V-belt drive. The motor must be set up in accordance with the maker's operating instructions.

Attention! **Follow the relevant operating instructions for V-belt drives, e.g. V51. Fit pulley wheels on to the drive shaft, Pos.515, in accordance with Section 6.5.**

Note: Incorrect belt tension results in belt breakages and damage to the bearing.

For other types of drive, e.g. chain-type drive and the like, follow relevant operating instructions and/or maker's information.

⚠ **Always fit suitable safety fixtures to cover the belt-, chain- or other open-type drive systems.**

Attention! **After completion of mounting or adjustment work protect columns, Pos.581, and any other bright parts against corrosion as set out in Section 7.4 or with another suitable, permanent anti-corrosive agent.**

6.7.1 IEC Motor frame size up to 112

Description of the assembly work

- Loosen screw (4x) Pos.585.
- Set height of motor plate, Pos.590, by evenly turning screws, Pos.588, and thereby adjust e.g. the belt tension.
- After setting to the correct height tighten screws, Pos.585, to torque specified in Table 10.2.5.

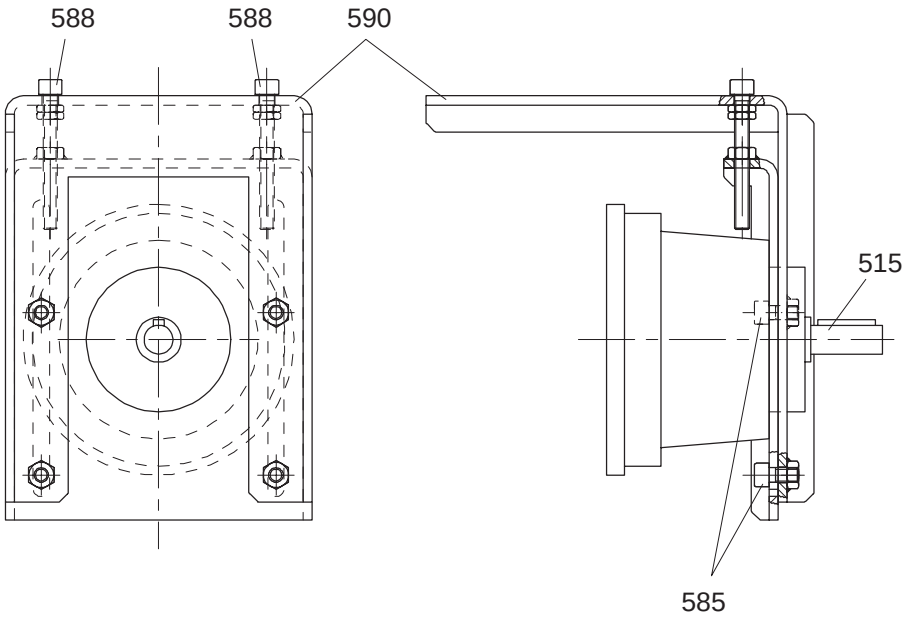

515 Drive shaft
585 Screw
588 Screw
590 Motor plate

6.7.2 IEC Motor frame size 132 to 200

Do not re-adjust the motor base plate in downward mounting position as it may slip out of the holder.

Description of the assembly work

- Loosen grub screw (4x) Pos.585.
- Set height of motor plate, Pos.590, by evenly turning the hexagon nut, Pos.589.
- Tighten grub screws Pos.585 after adjusting the correct height.

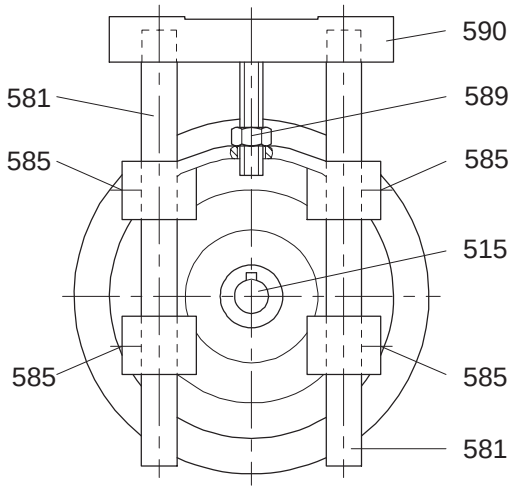

515 Drive shaft
581 Column
585 Threaded pin
589 Hexagon nut
590 Motor plate

6.7.3 IEC Motor frame size 225

Description of the assembly work

- Loosen grub screw (4x) Pos.585.
- Loosen hexagon nuts, Pos.592.1 and Pos.592.2 of the support.
- Set height of motor plate, Pos.590, by evenly turning the hexagon nuts (2x), Pos.589, and so adjust e.g. the belt tension.
- Tighten grub screws Pos.585 after adjusting the correct height.
- Tighten hexagon nuts, Pos.592.1 and Pos.592.2.

Attention! **When tightening the hexagon nuts, Pos.592.1 and Pos.592.2, the motor bracket, Pos.590, must not be displaced or distorted.**

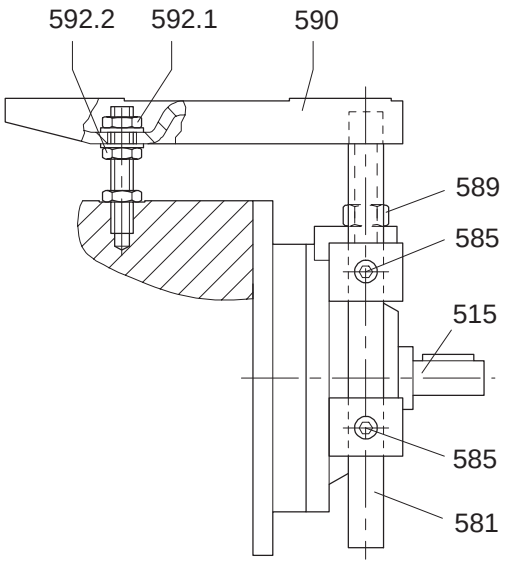

515 Drive shaft
581 Column
585 Threaded pin
589 Hexagon nut
590 Motor plate
592.1 Hexagon nut
592.2 Hexagon nut

7. Startup

7.1 Measures before startup

7.1.1 Oil level check

- Before connecting up the drive system to the current supply check the oil level or
- Shut down the gear unit by shutting off the drive unit.

⚠ **Secure drive unit to prevent accidental startup. Affix notice at the switch-on point.**

Note: In case of tandem gear units, each single gear unit should be inspected separately.
Check oil level with the oil cooled down.
Even after a short run, oil needs a longer ‘rest’ in order to release possible air bubbles.

7.1.1.1 Checking the oil level in the gear unit housing

Screw out the plug screw at the point marked with this symbol 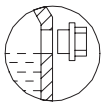 .

Note: If the oil level is correct, a small amount of oil may flow out, the oil must at least come up to the lower edge of the bore.

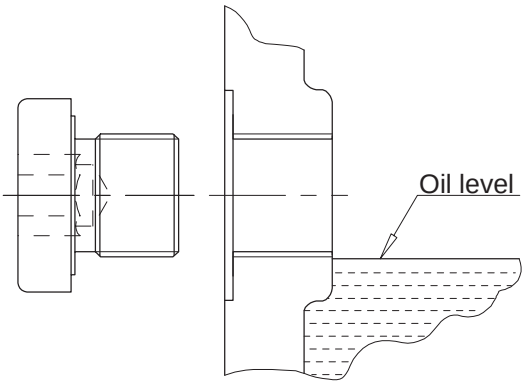

⚠ **Any oil escaping should be removed immediately with oil binding agent in an environmentally compatible way.**

For drives with only one plug screw, checking the oil level is not possible.

7.1.1.2 Oil sight glass (Special feature)

- If an oil inspection glass is provided, the oil level must be visible in the middle of the inspection glass

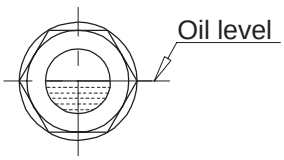

7.1.1.3 Dipstick (Special feature)

- Check oil level with dipstick:
  The oil level must be between the lower and upper mark of the dipstick.

7.1.2 Startup without long term preservation

- **MOTOX®-N drives** are delivered with the appropriate lubricants ready for operation depending on the specified conditions of use.

Attention! **On gear systems with the required housing ventilation the required ventilator filter is delivered loose with the unit. It must be replaced with the appropriate screw plug before the initial start-up of the gear unit.**

It must be used at the position indicated by this symbol 

(see Section 3.2).

7.1.3 Startup in case of long term preservation

7.1.3.1 Long term preservation up to 18 months

Attention! **Before starting up the gear unit, it should be filled with lubricant (see 7.1.4).**

7.1.3.2 Long term preservation up to 36 months

Attention! **The gear unit is completely filled with oil. Before the startup, the oil level should be corrected according to the type of construction.**

The oil level should be reduced to the level marked with

this symbol 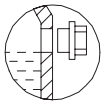 **(see 7.1.1).**

⚠ **Any oil escaping should be removed immediately with oil binding agent in an environmentally compatible way.**

7.1.4 Filling with lubricant

- Screw out venting screw or venting filter or plug screw at the highest point (see 3.2 or point of ventilation).

Attention! **Fill gear unit up with fresh oil using a filling filter (max. filter coarseness 60 µm). The quantity of oil depends on the mounting position!**

Note: Recommendations on the oil to be used should be taken from Section 10. “Maintenance and repair”.
Data, such as oil grade, oil viscosity and oil quantity required will be found on the rating plate (see Section 3. “Technical data”).

Attention! **Finally, check the oil level (see 7.1.1).**

⚠ **Any oil escaping should be removed immediately with oil binding agent in an environmentally compatible way.**

7.1.5 Drive with backstop

⚠ **Secure drive unit to prevent accidental startup. Affix notice at the switch-on point.**

Attention! **Check the direction of rotation before putting into service!**

E.g. by manually turning the input shaft or the motor. Check the motor direction of rotation according to the phase sequence, swap two supply leads if necessary.

7.2 Shutdown

- Shut down the gear unit by shutting off the drive unit.

⚠ **Secure drive unit to prevent accidental startup. Affix notice at the switch-on point.**

Note: If shut down for a considerable period of time, the gear unit should be run briefly at intervals of three weeks. If shut down for a period exceeding six months, the gear unit should be preserved (see 7.3 und 7.4).

7.3 Preservation with gear oil

- Long term preservation up to 36 months.

Completely top up the gear unit with the filled oil grade.

⚠ **Any oil escaping should be removed immediately with oil binding agent in an environmentally compatible way.**

7.4 External preservation procedure

- Clean surfaces.

Attention! **Cleaning the drive with a high-pressure cleaning device is not permissible. Do not use sharp-edged tools.**

- Smear shaft seal rings with grease for protection against preservatives.
- Coating: check, in case of damage have it repaired by an expert.
- Apply preservatives.

Protection time	Preservative name	Layer thickness	Remarks
uo to **12** Monate	Tectyl 846 K19	approx. 50 µm	Wax base long preservation, sea water resistant, tropic-proof, benzine-soluble

Table 7.4: External preservation of shaft ends and other bright metal surfaces

8. Operation

During operation, the gear units should be checked for

- excessive operating temperature (In continuous operation using mineral oil, the gear unit is suitable for a temperature of 90°C; at higher temperatures, it may be necessary to use synthetic oil. Short-term temperatures of 100°C are permissible, see also Section 10. “Maintenance and repair”).
- any changes in gear unit noises
- possible oil leakage at the housing and the shaft seals.

Attention! **If irregularities are detected during operation, the drive assembly should be shut off immediately. The cause of the malfunction should be determined with the aid of the Troubleshooting Table (Section 9. “Disturbances, reasons and remedy”).**
The Troubleshooting Table lists possible malfunctions, their causes and suggestions for their remedy.
If the cause cannot be determined or there is no facility for repair with suitable equipment, we recommend calling in one of our service fitters (see Section 11. “Spare parts stock, service addresses”).

9. Disturbances, reasons and remedy

Note: Malfunctions occuring during the warranty period which necessitate repair of the gear unit may only be repaired by **FLENDER TÜBINGEN GMBH** service personnel. Even after the warranty period has elapsed, we recommend our customers to consult our Service Division concerning malfunctions whose cause cannot be clearly ascertained.

Malfunctions	Causes	Remedy
Temperature rise at bearing points	Oil level in gear unit housing too low	For oil level check see section 7.1.1; if necessary, adjust oil level.
	Oil is overaged	Check when last oil change was carried out; change oil if necessary, see section 10..
	Bearing(s) defective	Call in FLENDER TÜBINGEN Service. Check bearing(s); replace if necessary.
Excessive operating temperature	Oil level in gear unit housing too high	For oil level check see section 7.1.1; if necessary, adjust oil level.
	Oil is overaged	Check when last oil change was carried out; change oil if necessary, see section 10..
	Oil is very dirty	Change oil, see section 10..
	Fan cowl of the motor and/or drive is very dirty	Clean fan cowl and surface of the drive,see 10.2.4.
	Backstop does not run freely	Call in FLENDER TÜBINGEN Service. Repair backstop, replace if necessary.
Change in gear unit running noises	Damage to tooth systems	Call in FLENDER TÜBINGEN Service. Check toothed components; if necessary replace damaged components.
	Excessive bearing play	Call in FLENDER TÜBINGEN Service. Adjust bearing play.
	Bearing defective	Call in FLENDER TÜBINGEN Service. Replace defective bearings.
	External loading on input and output too high	Correct loading to nominal data. E.g. correct belt tension.

Malfunctions	Causes	Remedy
Loud noises in the region of the gear unit mounting	Gear unit mounting has loosene	Tighten bolts/nuts at recommended tightening torque. Replace damaged bolts/nuts.
Noticeable lubricant leakage	Wrong mounting position/oil level	Correct mounting position according to rating plate. For oil level check see section 7.1.1; if necessary, adjust oil level.
	Inadequate sealing of housing cover or joints	Call in FLENDER TÜBINGEN Service. Seal again.
	Radial shaft seal defective	Call in FLENDER TÜBINGEN Service. Replace radial shaft seal.
Drive does not start or starts under great effort	Lubricant viscosity incorrect	Fill in correct lubricant.
	Oil level in the gear unit housing too high	For oil level check see section 7.1.1; if necessary, adjust oil level.
	External loading on output too high	Correct loading to nominal data.
	Brake of motor is not released	Check switching/connection of brake, correct if necessary.
	Drive works against the backstop	Call in FLENDER TÜBINGEN Service. Change the direction of rotation of the motor or the backstop. Check the backstop.
Drop in speed or torque	Belt tension too low (on belt drives)	Correct belt tension. Replace belt if necessary.
Play on input and output too high	Elastic element worn (on couplings)	Replace elastic element; Call in FLENDER TÜBINGEN Service.
	Positive connection worn out by overload	Call in FLENDER TÜBINGEN Service.

Table 9.: Malfunctions, causes and remedy

10. Maintenance and repair

10.1 General information on maintenance

Note: All maintenance and repair work should be carried out with due care and only by thoroughly trained personnel.
The notes in Section 2. “Safety notes” should be observed.

Attention! **The periods listed in Table 10.1 are largely dependent on the conditions of use of the gear unit. For this reason, it is only possible to give average periods which refer to a**

- daily operating time of	**24 h**
- duty factor of	**ED 100 %**
- input drive speed of	**1500 min^{-1}**
- max. oil temperature of	**90°C** (with mineral oils, CLP) **100°C** (with synth. oils, PGLP)

Note: Under different operating conditions, the periods should be adjusted accordingly.

Measures	Causes	Remedy
Observe/check gear unit noise for changes	from time to time, more often during operation if possible	-
Observe/check oil temperature	from time to time, more often during operation if possible	-
Oil level check	monthly	see 7.1.1
Check gear unit for leakage	monthly	-
Initial oil change after startup	after approx. 10000 operating hours, at the latest after 3 years	see 10.2.1
Subsequent oil changes	every 3 years or 10000 operating hours 1)	see 10.2.1
Relubrication of anti-friction bearings	jannualy or every 5000 operating hours 2)	see 10.2.2
Clean ventilator filter	every 3 months	see 10.2.3
Clean drive	according to the degree of contamination	see 10.2.4
Check all fixing screws for tightness	at least once a year	see 10.2.5
Carry out complete inspection of gear unit	at least once a year	see 10.2.6

Table 10.1: Maintenance and repairs

1) With synthetic oils (PGLP), the times can be doubled.

2) The specified grease service lives apply with a max. ambient temperature of 40°C. The grease service life must be decreased by a factor of 0,7 for every 10°C rise in temperature (max. 20°C = factor 0,5). **With an ambient temperature of 25°C double the grease service life can be expected**.

10.2 Description of maintenance and repairs

10.2.1 Perform oil change or oil flushing

Attention! **Different types of oil must not be mixed.**

Note: Types of oil:
- mineral oil (CLP oil DIN 51517/3)
- synthetic oil with a specific base (PGLP-Öl)

Specifications like oil type, oil viscosity and required oil quantity are shown on the name plate (see 3.1).

Attention! **Oil change and oil flushing:**
If using the same type of oil as before, use only that oil.
If using a new oil type, use only the new type.

Thoroughly remove oil sludge, abraded material and used oil residue from the housings by oil flushing.

Note: High-viscosity oils must be warmed beforehand. The oil should be drained off after shutdown, while the gear unit is still warm.

- Shut down the gear unit by shutting off the drive unit.

⚠ **Secure drive unit to prevent accidental startup. Affix notice at the switch-on point.**

- Place a suitable collection receptacle under the oil drain plug of the gear unit housing.
- Unscrew ventilator filter on the upper side of the housing.
- Unscrew oil drain plug and drain oil off into the receptacle.

⚠ **There is a risk of scalding from the hot oil emerging. Wear protective gloves.**

- Screw in oil drain plug.

Note: Check condition of seal ring, use new seal ring if necessary.

- Filling with lubricant see 7.1.4.
- Screw in ventilator filter on the upper side of the housing.

10.2.2 Relubricating the anti-friction bearings in drive units

Relubricating the drive units is necessary from motor size 225 on.

The lubricating period of one year or 4000 operating hours refers to a temperature of 50°C measured on the housing surface near the bearing point.

Note: In case of temperatures exceeding 50°C, the lubricating period should be reduced by half of the original value for each temperature increase of 15 K.

Attention! **Do not mix greases of different soap bases when relubricating.**

The grease is injected into the bearing point by means of a grease gun via the grease nipples provided for this purpose. See 10.3 for lubricating greases to be used.

Note: Inject 50 g grease per lubricating point, unless other specifications are given in the vicinity of the lubricating point.

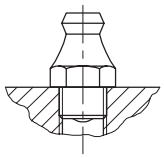

10.2.3 Clean ventilator filter

The ventilator filter must be cleaned after deposit of a dust layer - at least every 3 months. For this the filter must be unscrewed, flushed out with cleaning benzine or a similar cleaning agent and dried or blown through with compressed air.

⚠ **Ensure adequate ventilation. Do not inhale vapours. Do not smoke. Explosion hazard.**

10.2.4 Clean drive

- Shut down the gear unit by shutting off the drive unit.

⚠ **Secure drive unit to prevent accidental startup. Affix notice at the switch-on point.**

Keep drives free of dirt and dust, etc. in order to ensure a sufficient heat dissipation.

Attention! **Cleaning the drive with a high-pressure cleaning device is not permissible. Do not use sharp-edged tools.**

10.2.5 Checking all fixing screws for tightness

- Shut down the gear unit by shutting off the drive unit.

⚠ **Secure drive unit to prevent accidental startup. Affix notice at the switch-on point.**

- Check all fixing screws for tightness with a torque wrench

Thread size	Tightening torque	Property class min.
M 6	10 Nm	8.8
M 8	25 Nm	
M 10	50 Nm	
M 12	90 Nm	
M 16	210 Nm	
M 20	250 Nm	
M 24	450 Nm	
M 30	750 Nm	
M 36	2500 Nm	

Table 10.2.5: Tightening torques

Note: Unserviceable screws should be replaced by new ones of the same property class and type.

10.2.6 Inspection of the drive

The drive should be checked annually and with the aid of an inspection plan according to the possible criteria listed in Section 9. “Disturbances, reasons and remedies”.

In addition, the drive should be checked according to the criteria described in Section 2. “Safety notes”, e.g. check tight fit of the protective devices.

Any damage of the coating should be repaired by an expert.

10.3 Lubricants

Oil selection should always be determined by the oil viscosity (ISO VG class) specified on the rating plate of the gear unit. The viscosity class is valid for the operating conditions agreed on by contract.

Under different operating conditions, it will be necessary to consult us.

We have put together a list of suitable lubricants for the gear unit in Table 10.3.

We are acquainted with the composition of these lubricants and know that, in accordance with the latest technology, they possess values in respect of loadability, corrosion protection, load carrying capacity with micro-pitting, as well as compatibility with seals and internal coating on which the design of the gear unit has been based.

Thus, we recommend that our customers should select a lubricant from this Table, taking in account the viscosity class stated on the rating plate.

⚠ **The lubricants listed have no approval according to USDA -H1/-H2 (United States Department of Agriculture) and are as such not, or only limited approved, for use in the food or pharmaceutical industry.**
The lubricants are not, or only limited biologically decomposeable. They are usually according to the Classes 2 or 1 of hazard for water.
If lubricants are necessary according to these classifications, please contact the factory.
If the gearboxes are filled with special lubricants from the factory for the cases given above, this can be seen on the name plate e.g.: CLP-H1 VG220 or CLP E VG220.

Note: As a precaution against misunderstandings, we would like to point out that the recommendation does not imply any release in the sense of a warranty for the quality of the lubricant provided by your supplier. Each lubricant manufacturer must warrant the quality of his product himself.

If you do not follow our recommendations, you must take the responsibility for the technical suitability of the lubricant.

- In the case of synthetic oils not listed in Table 10.3, the corrosiveness of the oil to our internal coating should also be checked. A check of this nature is carried out by us at cost (cost on request).

Lubricant	Designation according to DIN 51502	Examples of lubricants										
		ARAL	BP	DEA	Esso	FUCHS	FLENDER	Mobil	Optimol	Shell	SRS	Tribol
Mineral Oils 1)	Oil CLP ISOVG220	Degol BG220	Energol GR-XP220	Falcon CLP220	SPAR-TAN EP220	Renolin CLP220	Klüberoil GEM 1 220	Mobil-gear 630	Optigear BM220	OMALA OIL 220	Ersolan 220	TRIBOL 1100 ISO220
	Oil CLP ISOVG100	Degol BG100	Energol GR-XP100	Falcon CLP100	SPAR-TAN EP100	Renolin CLP100	Klüberoil GEM 1 100	Mobil-gear 627	Optigear BM100	OMALA OIL 100	Ersolan 100	TRIBOL 1100 ISO100
Synthetic Oils 2)	OIL PGLP ISOVG460	Degol GS460	Enersyn SG-XP 460	Polydea PGLP460	GLYCO-LUBE 460	Renodiol PGP460	Syntheso D460EP	Glygoyle HE460	Optiflex A460	TIVELA OIL SD		TRIBOL 800/460
	OIL PGLP ISOVG220	Degol GS220	Enersyn SG-XP 220	Polydea PGLP220	GLYCO-LUBE 220	Renodiol PGP220	Syntheso D220EP	Glygoyle 30	Optiflex A220	TIVELA OIL WB		TRIBOL 800/220
Lithium saponified anti-friction bearing greases NLGI 3/2		Aralub HL3, HL2	Energrease LS3, LS2	Glissando 30, 20	BE-ACON 3	Renolit FWA220 , FWA160	CEN-TRO-PLEX GLP402	Mobilux 3, 2	Longti-me PD2	ALVA-NIA R3, R2	Wiolub LFK2	TRIBOL 4020/ 220-2

Table 10.3: Lubricant selection

We would be pleased to recommend further suitable lubricants of the makes ADDINOL, CASTROL, FUCHS Lubritech, OMV, STATOIL, TEXACO, TUNAP and VALVOLINE on request through any of our customer service points.

1) Mineral base gear oils in accordance with designation CLP as per DIN 51 502.
   These oils comply with the minimum requirements as specified in DIN 51 517 Part 3.
   They are suitable for the following operating temperatures:
   CLP ISO VG 220: –5°C ... +90°C
   CLP ISO VG 100: –15°C ... +80°C
   The maximum temperatures can be exceeded by 10K for a short time.

2) Synthetic lubricants (polyglycols) in accordance with designation PGLP as per DIN 51 502.
   These oils are distinguished by their high ageing resistance and favourable effect on the efficiency of the gear unit.
   They are suitable for the following operating temperatures:
   PGLP ISO VG 220: –30°C ... +100°C
   PGLP ISO VG 460: –15°C ... +100°C
   The maximum temperatures can be exceeded by 10K for a short time.

Note: If the operating temperature of the drive exceeds or undershoots the limit values, the oil selected should be checked for suitability by consulting us.

11. Spare parts stock, service addresses

11.1 Stocking spare parts

Maintaining a stock of the most essential replacement and wearing parts on site will ensure that the drive is serviceable at all times.

We assume warranty only for original spare parts supplied by us.

Attention! **We would like to explicitly draw attention to the fact that spare parts and accessories not supplied by us have not been tested and approved by us either. Fitting and/or use of such products can therefore under certain circumstances adversely effect structurally specified properties of the drive and will thus impair active and/or passive safety. No form of reliability or warranty will be assumed by FLENDER TÜBINGEN GMBH for damage caused by the use of non-original spare parts and accessories.**

Please note that special production and supply specifications frequently exist for components and we will always offer spare parts in accordance with the latest technology and the latest legal requirements.

When ordering spare parts, the following data should be stated:

- Order No. (see rating plate ④)
- Type designation (see rating plate ⑤)
- Part No. (3-digit pos. No. from the spare parts list, or 6-digit ident. No. or 7-digit part No.)
- Quantity

11.2 Spare parts and Customer Service addresses

FLENDER TÜBINGEN GMBH Germany

FLENDER TÜBINGEN GMBH Europe

FLENDER TÜBINGEN GMBH International

See following pages.

FLENDER TÜBINGEN GMBH Germany

Sales Office Berlin

Egellsstraße 21, D-13507 Berlin
Postfach, 13500 Berlin
Tel.: (030) 4301-0 - Fax: (030) 4301-2712
E-mail: VZ_Berlin.BOHFLE@BDL-OB.DE

Your contact in Tübingen: Tel.: 07071 / 707-326 Fax: 07071 / 707-475

Sales Office Hannover

Marktplatz 3, D-30853 Langenhagen
Postfach 1869, D-30839 Langenhagen
Tel.: (0511) 77189-0 - Fax: (0511) 77189-89
E-mail: VZ_Hannover.BOHFLE@BDL-OB.DE

Your contact in Tübingen: Tel.: 07071 / 707-470 Fax: 07071 / 707-324

Sales Office Herne

Westring 303, D-44629 Herne
Postfach 101240, D-44602 Herne
Tel.: (02323) 497-0 - Fax: (02323) 497-250
E-mail: VZ_Herne.BOHFLE@BDL-OB.DE

Your contact in Tübingen: Tel.: 07071 / 707-435 Fax: 07071 / 707-475

Babcock Centre Office

c/o Deutsche Babcock AG H2 / 529
Duisburger Straße 375, D-46049 Oberhausen
Tel.: (0208) 833-1430 - Fax: (0208) 833-2187
E-mail: VZ_Babcock-Zentrum.BOHFLE@BDL-OB.DE

Your contact in Tübingen: Tel.: 07071 / 707-435 Fax: 07071 / 707-475

Sales Office Stuttgart

Friolzheimer Straße 3, D-70499 Stuttgart
Postfach 311262, D-70472 Stuttgart
Tel.: (0711) 78054-51 - Fax: (0711) 78054-50
E-mail: VZ_Stuttgart.BOHFLE@BDL-OB.DE

Your contact in Tübingen: Tel.: 07071 / 707-310 Fax: 07071 / 707-391

Sales Office München

Liebigstraße 15, D-85757 Karlsfeld
Postfach 1264, D-85750 Karlsfeld
Tel.: (08131) 9003-0 - Fax: (08131) 9003-33
E-mail: VZ_Muenchen.BOHFLE@BDL-OB.DE

Your contact in Tübingen: Tel.: 07071 / 707-467 Fax: 07071 / 707-211

FLENDER TÜBINGEN GMBH
D-72007 Tübingen - Bahnhofstraße, D-72072 Tübingen
Tel.: (07071) 707-0 - Fax: (07071) 707-400
http://www.flender.com

Further partners in the Flender Group:

FLENDER ENGINEERING & SERVICE ANTRIEBSTECHNIK GMBH
D-44607 Herne - Südstraße 111, D-44625 Herne
Tel.: (02323) 940-0 - Tx.: 8229868 - Fax: (02323) 940-200
http://www.flender-service.com

A. FRIEDR. FLENDER AG
D-46393 Bocholt - Alfred-Flender-Straße 77, D-46395 Bocholt
Tel.: (02871) 92-0 - Tx.: 813841 - Fax: (02871) 922596
http://www.flender.com

LOHER AG
D-94095 Ruhstorf - Hans-Loher-Straße 32, D-94099 Ruhstorf
Tel.: (08531) 390 - Tx.: 8531806 - Fax: (08531) 39437
http://www.loher.de

A. FRIEDR. FLENDER AG GETRIEBEWERK PENIG
Thierbacher Straße 24, D-09320 Penig
Tel.: (037381) 60 - Tx.: 322661 - Fax: (037381) 80286
http://www.flender.com

FLENDER GUSS GMBH
Obere Hauptstraße 228-230, D-09228 Wittgensdorf
Tel.: (03722) 64-0 - Tx.: 322352 - Fax: (03722) 64-3112
http://www.flender-guss.de

FLENDER TÜBINGEN GMBH Europe

AUSTRIA
Flender Ges.m.b.H. ● ⁜
Industriezentrum Nö-Süd
Strasse 4, Objekt 14, Postfach 132
A-2355 Wiener Neudorf
Tel. 02236-645
Fax 02236-64570-10
E-mail: office@flender.at

BELGIUM & LUXEMBOURG
N.V. Flender Belge S.A. ● ⁜
Cyriel Buyssestraat 130
B-1800 Vilvoorde
Tel. 02-2531030
Fax 02-2530966
E-mail: sales@flender.be

CZECH REPUBLIC
A. Friedr. Flender AG ●
Branch Office Czech Republic
Hotel DUO, Teplicka 17
CZ-19000 Praha 9
Tel. 00420-2-83882300
Fax 00420-2-83882205
E-mail: flender_pumprla@hotelduo.cz

DENMARK
FLENDER AS ◇ ⁜
Sydmarken 46
DK-2860 Soborg
Tel. 0045-7025-3000
Fax 0045-7025-3001
E-mail: mail@flender.dk
http://www.flender.dk

EAST EUROPEAN COUNTRIES
Vertriebszentrum Berlin ●
Egellsstrasse 21
D-13507 Berlin
Tel. 0049-304301-0
Fax 0049-304301-2712

FINLAND
Flender Oy ●
Korppaanmäentie 17 CL 6
FIN-00300 Helsinki
Tel. 09-4778410
Fax 09-4361410
E-mail: webmaster@flender.fi
http://www.flender.fi

FRANCE
Flender France S.A.R.L. ● ⁜
3, Rue Jean Monnet
Zone des Côtes
F-78990 Elancourt
B.P. 5
F-78312 Maurepas Cedex
Tel. 1-30663900
Fax 1-30663513
E-mail: flender@club-internet.fr

BRANCH OFFICES:
Flender S.A.R.L.
25, Boulevard Joffre
F-54000 Nancy
Tel. 038-3308590
Fax 038-3308599

Flender S.A.R.L.
36, Rue Jean Broquin
F-69006 Lyon
Tel. 0472-839520
Fax 0472-839539

GREECE
Flender Greece ●
14, Grevenon Str.
GR-11855 Athens
Tel. 00301-3423827
Fax 00301-3423827
E-mail: flender@mail.otenet.gr

Mangrinox S.A. ◇
14, Grevenon Str.
GR-11855 Athens
Tel. 00301-3423201-3 / 3412427
Fax 00301-3459928 / 3459767
E-mail: mangrinox@mail.otenet.gr

HUNGARY
A. Friedr. Flender AG ●
Branch Office
Bécsi Út 3-5
H-1023 Budapest
Tel. 01-3450720
Fax 01-3450729

ITALY
Flender Cigala S.p.A. ■ ⁜
Via Privata da Strada Provinciale, 215
I-20040 Caponago (Mi)
Tel. 0039-02-95742371
Fax 0039-02-95743887
E-mail: flenci@iol.it

THE NETHERLANDS
FLENDER NEDERLAND BV ● ⁜
Lage Brink 5-7
NL-7317 BD Apeldoorn
Tel. 055-5275000
Fax 055-5218011
E-mail:sales@flender.nl
http://www.flender.nl

NORWAY
ATB Norge ● ⁜
G. Bauknecht A.S.
Frysjavn 40
N-0884 Oslo
Tel. 02-2021036
Fax 02-2021050
E-mail: administrasjon@atb.no

POLAND
A. Friedr. Flender AG ●
Branch Office
Oddzial w Mikolowie
ul. Wyzwolenia 27
PL-43-190 Mikolow
Tel. 032-2264561
Fax 032-2264562
E-mail: flender@pro.onet.pl

PORTUGAL
ROVEX ◇
Rol. e Vedantes, Lda.
Rua Nelson de Barros, 11 r/c esq.
P-1900 Lisboa
Portugal
Tel. 00351-1-8160240
Fax 00351-1-8145022

SPAIN
Flender Ibérica S.A. ●
Poligono Industrial San Marcos
Calle Morse, 31 (Parcela D-15)
E-28906 Getafe/Madrid
Tel. 00349-1-6836186
Fax 00349-1-6834650
E-mail: f-iberica@flender.es
http://www.flender.es

SWEDEN
Flender Svenska AB ◇
Ellipsvägen 11
S-141 75 Huddinge
Tel. 46-8-4495670
Fax 46-8-4495690
E-mail: mail@flender.se
http://www.flender.se

SWITZERLAND
Flender ATB-Loher ● ⁜
Zeughausstr. 48
CH-5600 Lenzburg
Tel. 062-8857600
Fax 062-8857676
E-mail: info@flender.ch
http://www.flender.ch

TURKEY
Flender Güc Aktarma Sistemler San.● ⁜
ve Tic. Ltd. STI
Imes Sanayi Sitesi
E Blok 502. sokak No.22
TR-81360 Dudullu-Istanbul
Tel. 0216-3643413
Fax 0216-3645913
E-mail: cuzkan@flender.com
http://www.flendertr.com

UNITED KINGDOM & EIRE
Flender-Himmelwerk Ltd. ■ ⁜
Thornbury Works, Leeds Road
GB-Bradford BD3 7EB West Yorkshire
Tel. 01274-657700
Fax 01274-669836
E-mail: kjboland@flender-power.co.uk
http://www.flender-power.co.uk

BOSNIA-HERZEGOVINA / BULGARIA / CROATIA / REPUBLIC OF MACEDONIA / REPUBLIC OF YUGOSLAVIA / ROMANIA / SLOVAKIA / SLOVENIA / ALBANIA
A. Friedr. Flender AG ●
Branch Office
Industriezentrum Nö-Süd,
Strasse 4, Objekt 14
A-2355 Wiener Neudorf
Tel. 02236-6457020
Fax 02236-6457023

■ Subsidiary, Manufacturing, Sales and Stock

● Subsidiary, Sales and Stock

◇ Distributor

⁜ Assembly Centre

FLENDER TÜBINGEN GMBH International

AFRICA

ALGERIA & TUNESIA
Simetra Flender S.A.R.L. ●
3, Rue Jean Monnet
Zone des Côtes
F-78990 Elancourt
B.P. 5,
78312 Maurepas Cedex
Tel. 1-30663900
Fax 1-30663513

EGYPT
Farid Hassanen & Co. ◇
81, Matbaa Ahleia Street
Boulac-Cairo, A.R.E.
Tel. 5751489
Fax 5751383

Workshop and Service:
13, Selim Oma Street
Boulac-Cairo, A.R.E.
Tel. 764656, 774897
Fax 769741

MOROCCO
S.M.E.M. ◇
15, Boulevard du Fouarat
Casablanca
Tel. 2-240253, 2-240271

SAUDI ARABIA/U.A.E./KUWAIT
Ticos-International ◇
General Trading Co.
P.O. Box 2191
Ajman
Tel. 428716
Fax 428730

SOUTH AFRICA
Flender Power Transmission (Pty.)Ltd.●⁜
No.8 Greenfield Park
Cnr. Furnace Street & Quality Road
Isando, Kempton Park Tv1.
P.O. Box 8358, Elandsfontein 1406
Tel. 011-3922850/1/2/3/4/5
Fax 011-3922434
E-mail: contact@flender.co.za
http://www.flender.co.za

BRANCH OFFICE:
P.O. Box 28283 ● ⁜
Bothasig, Cape Town 7406
Unit No.3 Marconi Park
No.9 Marconi Cresent
Montague Garden
Tel. 021-5515003
Fax 021-523824
E-mail: flenderc@global.co.za

AMERICA

BRAZIL
Flender Brasil Ltda. ■ ⁜
Rua Quartoze Nr. 60, Caixa Postal 296
32211-970 Contagem-MG
Tel. 031-3692000
Fax 031-3311893
E-mail: flender@uol.com.br

BRANCH OFFICES:
Rua Aratans, 1.455
Planalto Paulista
04081-005-São Paulo-SP
Tel. 011-5365211
Fax 011-5301252
E-mail: flender@uol.com.br

CANADA
Flender Power Transmission Inc. ● ⁜
215 Shields Court, Units 4-6
Markham, Ontario L3R8V2
Tel. 905-3051021
Fax 905-3051023
E-mail: flender@interlog.com
http://www.flenderpti.com

BRANCH OFFICES:
Flender Power Transmission Inc.
Bay # 3, 6565 40th Street S.E.
Calgary, Alberta T2C - 2J9
Tel. 403-543-7744
Fax 403-543-7745
E-mail: flender@telusplanet.net

COLOMBIA
Flender de Colombia
A.G.P. Representaciones Ltda.
Carrera 68 Nr. 16-80 Piso 4.
CIPRES TRADE CENTER
Bogota - Colombia
Tel. 91-3460561
Fax 91-3460415
E-mail: agprepre@colomsat.net.co

CHILE
Sargent S.A. ◇ ⁜
Av. Pdte. Bulnes 205, Casilla 166 D
Santiago
Tel. 02-6991525
Fax 02-6983989

MEXICO
Flender de Mexico, S.A. de C.V. ●
Vista Hermosa No.23
Col. Romero Vargas
Adpo. Postal 2-85
Puebla, Pue.C.P. 72131
Tel. 22310951, 22310844
Fax 22310913
E-mail: flendermexico@infosel.net.mx
http://puebla.infosel.com.mx/flender

BRANCH OFFICE:
Flender de Mexico, S.A. de C.V.
Oficina Monterrey
Diamante 112, Col. Pedregal del Valle
San Pedro de Garza Garcia,
C.P. 66280
Monterrey, Nuevo Leon
Tel. (08)3034806
Fax (08)3034806

USA
Flender Corporation ■ ⁜
950 Tollgate Road, P.O. Box 1449
Elgin, Illinois 60123
Tel. 847-9311990
Fax 847-9310711
E-mail: weiladt@flenderusa.com
E-mail: uwethoenniss@flenderusa.com
http://www.flenderusa.com

VENEZUELA
F. H. Transmissiones S.A. ◇ ⁜
Urb. Buena Vista
Calle Johan Schafer o Segunda Calle
Edif. F.H.T. (frente a Lab. Boehringer)
Municipio Sucre, Petare Edo. Miranda
Caracas - Venezuela
Tel. 0058-2-215261
Fax 0058-2-211838
E-mail: fhtransm@telcel.net.ve

■ Subsidiary, Manufacturing, Sales and Stock

● Subsidiary, Sales and Stock

◇ Distributor

⁜ Assembly Centre

FLENDER TÜBINGEN GMBH International

AUSTRALIA

AUSTRALIA

Flender (Australia) Pty. Ltd. ● ⁜
9 Nello Place
Wetherill Park
N.S.W. 2164
Sydney
Tel. 02-97562322
Fax 02-97564892
E-mail: patrick@flender.com.au
http://www.flenderaust.com

BRANCH OFFICES:
20 Eskay Road, South Oakleigh
Melbourne
Victoria 3167
Tel. 03-95790633
Fax 03-95790417
E-mail: kevin@flender.com.au

20 Brookes Street, Bowen Hills
Brisbane
Qld. 4006
Tel. 07-32522711
Fax 07-32523150
E-mail: johnw@flender.com.au

1 Dampier Road
Welshpool, Perth
W.A. 6106
Tel. 09-4518355
Fax 09-4583582
E-mail: paulj@flender.com.au

NEW ZEALAND

R.R. Fisher & Co.Ltd. ◇
13, Spring Street
Papatoetoe
New Zealand
Tel. 09-2784059

ASIA

ASEAN

Flender Singapore Pte. Ltd. ● ⁜
13A, Tech Park Crescent
Singapore 637843
Tel. 0065-8979466
Fax 0065-8979411
E-mail: flender@signet.com.sg
http://www.flender.com.sg

PEOPLE'S REPUBLIC OF CHINA

Beijing Flender ● ⁜
No. C-411, Office Building,
Beijing Lufthansa Center
No. 50, Liangmaqiao Road
Beijing 100016 P.R.C.
Tel. 0086-10-64622151-55
Fax 0086-10-64622143
E-mail: rican@public.east.cn.net

Shanghai Representative Office
14C, Zhao Feng Universe Building
1800 Zhongshan West Road
Shanghai 200233, China
Tel. 021-64282625
Fax 021-64282615

INDIA

Flender Limited. ■
2, St. Georges Gate Road, 5 th Floor
Calcutta-700022
West Bengal - India
Tel 33-223-0164/-0545/-0846
Fax 33-223-0830
E-mail: flenderc@giascl01.vsnl.net.in

Flender Macneill Gears Ltd.
Southern Region Office
41, Nelson Manickam Road
Aminjikarai
Chennai - 600029
Tel. 44-3741076/0677
Fax 44-3740473
E-mail: flenderm@giasmd01.vsnl.net.in

New Dehli
Tel. 11-6250104/0221
Fax 11-6256372

Bombay
Tel. 22-7657227
Fax 22-7657228

INDONESIA

PT Flenindo Aditransimisi ◇ ⁜
Jl. Ketintang Wiyata VI No. 22
Surabaya 60231
Indonesia
Tel. 6231-8291082
Fax 6231-8286363
E-mail: gnsbyfld@indo.net.id

JAPAN

Flender Ishibashi MFG. Co. Ltd. ■
(Nogata Industrial Park)4636-15
Oaza Kamitonno
Nogata-Shi, Fukuoka-ken
822 Japan
Tel. 09492-6-3711
Fax 09492-6-3902
E-mail: flibs@imb.net

KOREA

Flender LTD., KOREA ◇ ⁜
1128-4 Kuro-Dong, Kuro-Ku,
Seoul, Korea. 152-050
Tel. 02-859-1750-3
Fax 02-859-1754
E-mail: flender@nuri.net

Sung Ji Trading Co. ◇ ⁜
No.211, Ma Yeol
Gochuk Ind. Market 103-4
Gochuk Dong
Kuro-Ku, Seoul/Korea
Tel. 02-688-8367, 8368
Fax 02-688-8368

MALAYSIA

German Transmission ◇ ⁜
Machinery SDN. BHD.
Prime Subang Industrial Park
No.3 Block C, Lot 757
Jl Subang 6, off Persiaran Subang
47500 Petaling Jaya
Selangor, Malaysia
Tel. 03-7336023
Fax 03-7336259

PAKISTAN

O.T.C. ◇
114 Alama Iqbal Road
Lahore-5
Tel. 42-869398
Fax 42-305291

PHILLIPPINE

OTEC Pemex Philippines, Inc. ◇ ⁜
Rm 209-210 Quinio Building
#64 Sen. Gil J. Puyat Avenue,
Makati City
Phillippines
Tel. 2-8448218, 8924636
Fax 2-8437244, 8233602
E-mail: otecimq@pacific.net.ph

TAIWAN

A. Fried. Flender AG
Taiwan Branch ■ ⁜
No. 5, Alley 17, Lane 194, HuanHo St.,
Hsichih, Taipei Hsien, Taiwan, R. O. C.
Tel. 02-26932441-3
Fax 02-26943611
E-mail: flentwan@top2.ficnet.net.tw

THAILAND

Smith Technology Co. Ltd. ◇ ⁜
128/75 Phyathai Plaza Building
7th. Fl., Phyathai Road
Rajthevee
Bangkok 10400
Tel. 02-2165831/3
Fax 02-2165799

■ Subsidiary, Manufacturing, Sales and Stock

● Subsidiary, Sales and Stock

◇ Distributor

⁜ Assembly Centre

12. Declaration by the manufacturer

Declaration by the manufacturer

as defined by EC machinery directive 98/37/EEC Annex II B

We hereby declare that the

Gear units and gear motors of types

D./Z. 38	**D./Z. 108**
D./Z. 48	**D./Z. 128**
D./Z. 68	**D./Z. 148**
D./Z. 88	**D./Z. 168**

described in these operating instructions are meant for being installed in a machine and that their putting into operation is prohibited until it has been ascertained that the machine, in which these components will be installed, corresponds to the regulations of the EC directive 98/37/EEC (original version) incl. all further amendments.

All the harmonised standards published by the EC-Commission in the official journal of the European Community applicable for our products are either totally or partly observed with this manufacturers declaration
These are especially:
- EN 292-1
- EN 292-2
- EN 294
- EN 349
- EN 60204-1

Tübingen, the 31.07.1998

(Manager of Standards Department)

Supplement to operating instructions

ATEX

MOTOX®-N

Gear units

and

gear motors

in ATEX design

Contents

FLENDER
TÜBINGEN

FLENDER TÜBINGEN GMBH · Bahnhofstr. 40-44 · D-72072 Tübingen
Tel. +49 (0) 7071/707-0 · Fax +49 (0) 7071/707-400 · http://www.flender.com
E-mail: sales-motox@flender-motox.com
A company of A. Friedr. Flender GmbH

Note.
These operating instructions contain only the supplements to **MOTOX®-N**-gear units in ATEX design.
Please note the complete sets of operating instructions BA F298 EN 12.01, BA K298 EN 12.01, BA G298 EN 12.01, BA S298 EN 12.01.

1.2 Proper usage

The gear motor satisfies the requirements of the explosion protection guideline 94/9/EC if the permitted conditions indicated on the rating plate are adhered to.

3.1 General technical data on the rating plate

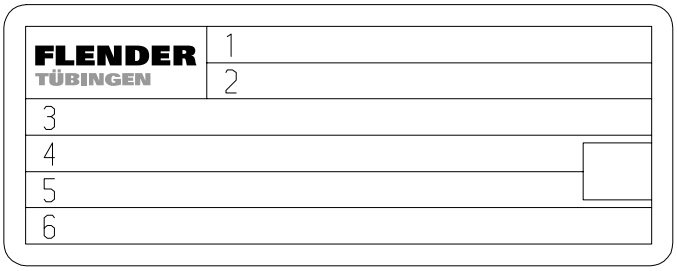

1 Type designation
2 Assembly option, order number
3 Output speed, T_2 = output torque, transmission ratio, service factor, input speed, T_1 = input torque
4 Explosion-Hazard symbol and explosion-hazard marking, CE marking
5 Oil quantity, oil grade, weight
6 Bearing life

5.11 Coats of paint

Plastic surfaces exposed to friction in normal operation can become electrostatically charged. With use in zone 21 and 22 (dusts) the thickness of the paint coat must not exceed 200 µm.

6.1 General information on installation

Potential equalisation

When mounting or connecting the gear unit to the machine care must be taken that potential is equalised. (Affect on bearings of stray electric currents from electrical equipment).

7.1.1 Oil level check

Checking the oil level sensor

To check the oil level sensor, the oil level must be lowered and raised until the sensor emits a control signal. Observe the separate operating instructions for the oil level sensor.

10. Maintenance and servicing of gear units in explosion-hazardous locations

Measures	Periods	Remarks
Observe and check gear units for noise, vibration or changes	from time to time, more often during operation if possible	Changes are an indication of possible incipient damage.
Check oil temperature	after 1h, 5h, 1 day, then weekly	The housing temperature must not exceed 90 °C. The temperature must be measured at the lowest point (oil sump), using a suitable temperature sensor.
Checking oil level	after the 1st day, then weekly	
Check gear units for leaks	after the 1st day, then weekly	
First oil change after start-up	after approx. 10 000 operating hours, at the latest after 3 years	
subsequent oil changes	every 3 years or 10 000 operating hours	
Relubricating the rolling bearings	yearly or every 5 000 operating hours	
Checking the function of the oil sensor	regularly and after oil change	To check the oil level sensor, the oil level must be lowered and then raised again until the sensor emits a control signal. Observe separate operating instructions.
Checking the coupling	for first time after 3 months	Observe separate operating instructions.
Cleaning the drive	according to level of contamination	Dust deposits prevent heat radiation and cause high operating temperatures.
Bearing renewal	The bearing life depends very much on the operating conditions. It is therefore very difficult to calculate it reliably. If the operating conditions are specified by the operator, the bearing life can be calculated and indicated on the rating plate. If no information is given, changes in the vibration and noise pattern can serve as an indication that an immediate bearing replacement is necessary.	
Check that covers and plugs are securely fastened	regularly	Entry of foreign bodies may cause sparks.
Check that fastening screws of mounted elements are securely tightened	after 1h, then regularly	Loose parts can cause sparks through impact.

All measures and checks and their results must be documented by the operator and kept in a safe place.

Maintenance and servicing must be carried out only by properly trained, authorised personnel.
Only parts supplied by Flender must be used for servicing.

12. Declaration of the manufacturer - Declaration of Conformity

EG Declaration of Conformity

Document no. **KE GKFSN298 DE / 12.02**

Equipment designation:	**MOTOX®-N gear unit series**
Type:	**E, Z, D, F, K, C**
Sizes:	**38 to 188**
Add-on subassemblies:	**A and K**

The designated equipment conforms to the requirements of the explosion protection guideline 94/9/EEC.
The designated equipment has been developed and manufactured in conformity to the following European standards:

- **EN 1050**/1996
- pr **EN 13463-5**/2002
- pr **EN 13463-6**/2002
- **EN 1127-1**/1997
- pr **EN 13463-8**/2001
- **EN 13463-1**/2001
- **EN 50281-1/-2**/1999

Kind of explosion protection for equipment group II of category 2 and 3:

- Ex II2 G/D ck T4/120°C
- Ex II2 G/D bck T4/120°C
- Ex II3 G/D ck T4/120°C

EC Declarations of Conformity and/or EC Type Test Certificates for further equipment added to the gear unit and/or for safety systems are enclosed.

These may be specifically:
- Rotating electrical machines
- Safety systems for oil level and/or temperature monitoring equipment

The technical documentation for gear units of category 2 has been subjected to a voluntary inspection and deposited with the specified office no. 0123 TÜV PRODUCT SERVICE GmbH, Ridlerstraße 31, D - 80339 München.

Tübingen, 17.12.2002 (Head of Gear Unit Development) (Head of Quality Management)

Bredgar Road, Gillingham, Kent, ME8 6PN
Tel: 01634 386683 e.mail: sales @ mixertech.co.uk
Fax: 01634 386684 Internet: www.mixertech.co.uk

Operating and Maintenance Manual Gland Plate Assembly

The gland plate helps to create a seal between the inside of the vessel and atmosphere via, between 6 and 9 rows of gland packing. Or 3 rows of packing and a running bush, the combination/s then sit tightly around the mixer shaft thus creating a seal providing some support.

The gland packing stack is housed within the throat of the gland plate, which is ultimately bolted to the vessel nozzle, and held down in position by a gland follower.

When installing the equipment it is important that the gland plate and packing are correctly located around the shaft and that it does not pre load the shaft when bolted down onto the vessel nozzle.

This is best achieved by simply allowing the gland plate assembly to slide down the shaft and rest on top of the nozzle one down place each of the bolts through the plate and nozzle and tighten to the recommended bolt torque.

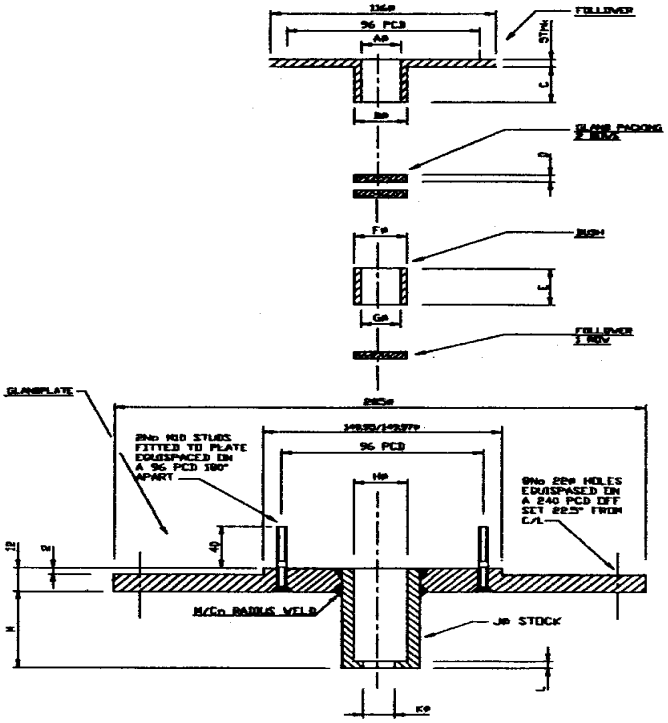

Incorrect assembly of the Gland Plate will cause early failure of the Mixer/Agitator. If in any doubt please do not hesitate to contact us.

MIXERTECH LIMITED

Bredgar Road, Gillingham, Kent, ME8 6PN
Tel: 01634 386683 e.mail: sales @ mixertech.co.uk
Fax: 01634 386684 Internet: www.mixertech.co.uk

Confidential

TITLE: REMOVABLE FLANGE COUPLING FITTING PROCEEDURE *Modification*

Please refer to Drawing No. 1000/01

1. *Ensure shaft end, and inside of coupling are clean and free from burrs.*
2. *Ensure shoulder on shaft is also clean and free from burrs.*
3. *Fit key (5) into shaft.*
4. *Smear shaft with copper slip or other anti-galling substance.*
5. *Slide coupling (4) onto shaft (1).*
6. *Ensure shaft sits down on shaft shoulder and the slide fit is a neat fit i.e. coupling does not rock on shaft.*
7. *Fit locating/spigot plate (3) to coupling ensure shaft end does not protrude past spigot plate face.*
8. *Fit 8.8 H.T bolts c/w spring washer and torque to recommend bolting torques given in service manual for the correct bolt size. Ensure bolt heads do not protrude outside spigot plate.*
9. *Remove coupling in reverse order.*

MIXERTECH LIMITED

Bredgar Road, Gillingham, Kent, ME8 6PN
Tel: 01634 386683 e.mail: sales @ mixertech.co.uk
Fax: 01634 386684 Internet: www.mixertech.co.uk

TITLE:	DATE 30/7/92	DRAWING NUMBER:
REMOVEABLE FLANGED COUPLING ASSEMBLY	DRAWN AEI	1000/01
	SCALE NTS	MOD.

H.T. 8.8 BOLTS C/W SPRINGWASHER

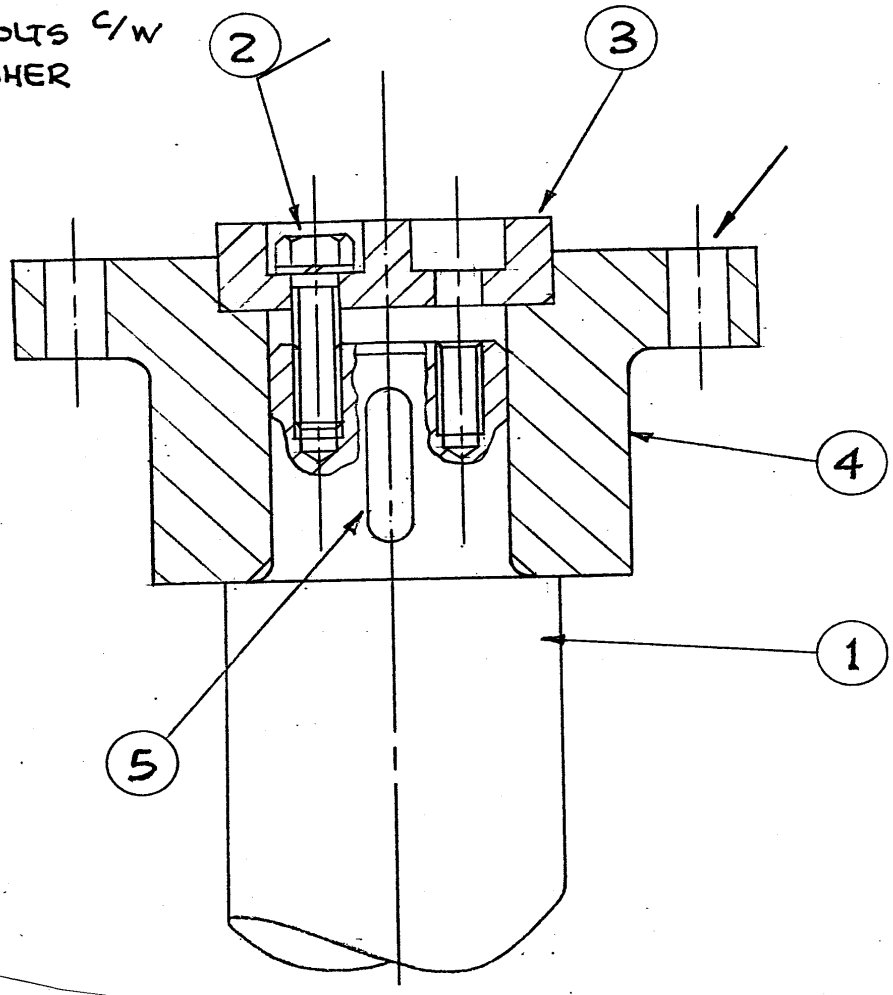

MIXERTECH LIMITED

Bredgar Road, Gillingham, Kent, ME8 6PN
Tel: 01634 386683 e.mail: sales @ mixertech.co.uk
Fax: 01634 386684 Internet: www.mixertech.co.uk

TITLE:- TURBINE BLADE FITTING DETAIL & BOLT TORQUES	DRG NO. 5002	DATE	26-6-95
		DRN	A.D.C.

BOLT DIA	REQUIRED BOLT TORQUE (NM)	
	GR 4.6 & ST/ST BOLTS	GR 8.8 HTS BOLTS
12	50	72
16	115	178
20	217	348
24	320	600
30	586	1190

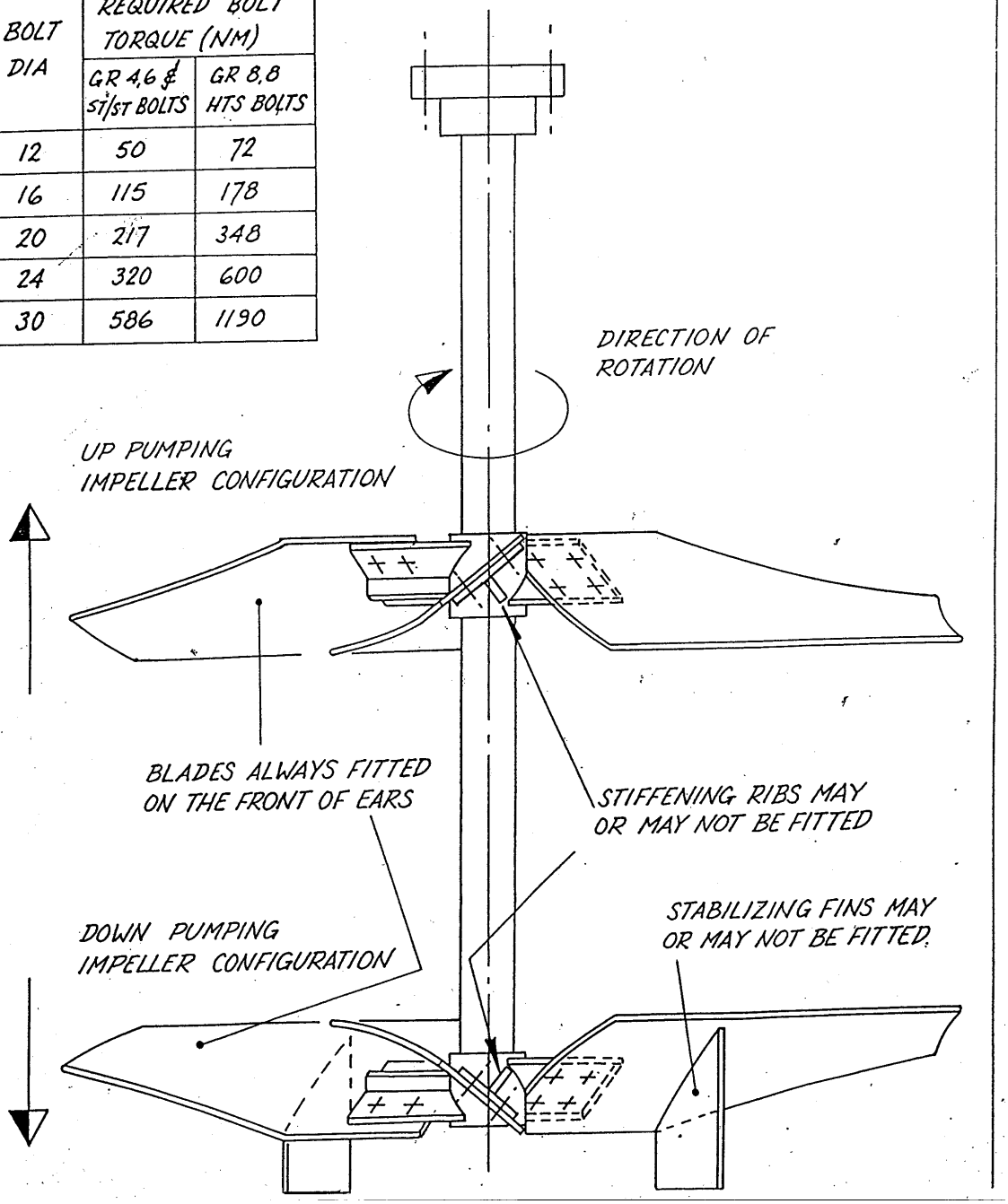

MIXERTECH LIMITED

Bredgar Road, Gillingham, Kent, ME8 6PN
Tel: 01634 386683 e.mail: sales @ mixertech.co.uk
Fax: 01634 386684 Internet: www.mixertech.co.uk

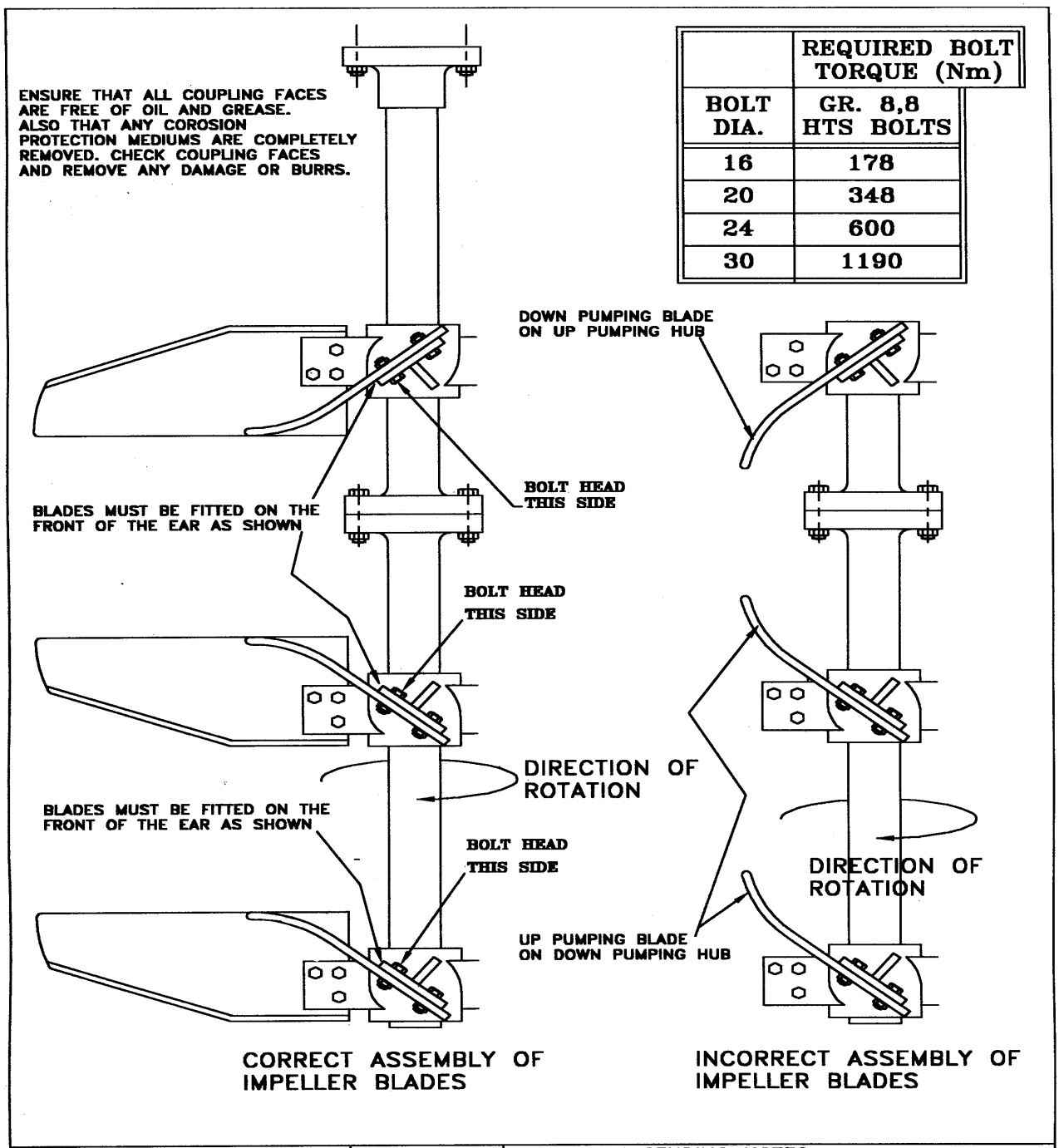

	REQUIRED BOLT TORQUE (Nm)
BOLT DIA.	GR. 8,8 HTS BOLTS
16	178
20	348
24	600
30	1190

MIXERTECH
TEL. 01634 386683
FAX. 01634 386684
GILLINGHAM – KENT

SCALE: N.T.S.
DRAWN: A.E.ISAACS
DATE: 04/05/98

MANUFACTURING NOTES:
1. .
2. .
3. .

TITLE: IMPELLERS AND SHAFT ASSEMBLY

DRG. No.: C14703/ASSY REV.

MIXERTECH LIMITED

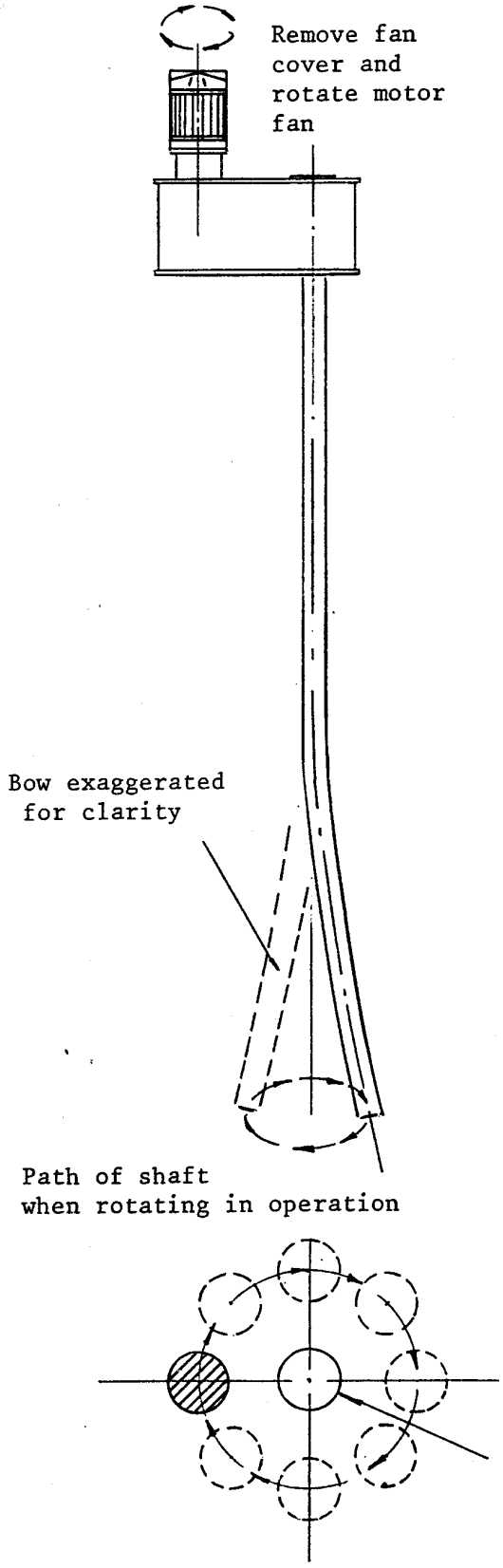

INSTALLATION OF BOTTOM STEADY BEARING OR SLAP RINGS

A bottom steady bearing (or slap ring) must be installed only after the drive assembly and lower agitator shaft, complete with impellers, has been assembled and firmly bolted in place. Do not predetermine the exact bearing location from certified tank and mixer outline dimension drawings. The vertical centre line of the steady bearing must coincide with the shaft's axis of rotation to minimise bearing preload.

This axis may not necessarily be at the centre of the tank. The agitator shaft must be hand rotated (using input shaft coupling or motor fan with a fixture attached to the shaft to scribe a line on the tank bottom. The centre of this inscribed area will be the location for the centre of the steady bearing.

The steady bearing should be securely installed, with its vertical centreline coincident with the axis of rotation, as established.

The amount of lateral movement required to bring the shaft into proper alignment with the final steady bearing location will vary, depending upon the shaft length and diameter.

True location of bottom
Steady or slap ring

Bredgar Road, Gillingham, Kent, ME8 6PN
Tel: 01634 386683 e.mail: sales @ mixertech.co.uk
Fax: 01634 386684 Internet: www.mixertech.co.uk

SUPPLY OF MACHINERY (SAFETY)

REGULATIONS 1992

The mixer or agitator is considered part of a system and therefore is **not** CE marked.

A Declaration of Incorporation is supplied in accordance with this.

IMPORTANT

By design, the shaft and impeller of a mixer cannot be guarded.

The unit therefore must not be operated unless it has been installed in the relevant vessel (system) which must comply with the machinery directives.

In addition, we recommend that the electrical supply be equipped with isolators to ensure that the mixer cannot be run whilst entry made to the vessel i.e. manways covers and inspection hatches etc.

Note:

This machinery must not be put into service until the machinery into which it is to be incorporated has been declared in conformity with the provisions of the machinery directive.

Bredgar Road, Gillingham, Kent, ME8 6PN
Tel: 01634 386683 e.mail: sales @ mixertech.co.uk
Fax: 01634 386684 Internet: www.mixertech.co.uk

DECLARATION OF INCORPORATION

Name & Place of Business: Mixertech Limited
Bredgar Road
Gillingham
Kent, ME8 6PN

Responsible Person: Mr A. LaMoury - General Manager

Machinery Description: Series 1000, 2000 and 3000 Top Entry Mixers and Agitators.

Series 5000 Side Entry Mixers and Agitators.

EC Type Examination Certificate: Not Applicable

Body To Which Technical File Has Been Forwarded: Not Applicable

Approved Body Issuing Certificate Of Adequacy: Not Applicable

Transposed Harmonised Standards, National Standards & Technical Specifications Used.

Description	B.S. No	EN/ISO/CEN
Code of Practice for earthing	7430 (1991)	
Guide to common aspects of installation and equipment for protection against electric shock	PD 6535 (1993)	IEC 1140
Requirements for electrical installations, IEE wiring Regulations, 16th Edition	7671 (1992)	IEC 364
Memorandum: Construction of electrical equipment for protection gainst electric shock	2754 (1976)	IEC 536

Electrical equipment of industrial machines	2771 Part 1 (1986)	EN 60204 IEC 204. 1 & 2
Code of practice for control of undesirable static electricity	5958 Part 1 & 2 (1991)	
Safety of machinery. Emergency Stop equipment, functional aspects. Principals for design	BS EN 418 (1992)	EN 418
Safety of machinery, Basic concepts, general principles for design	BS EN 292 Parts 1 & 2 (1991)	EN 292
Safety of Machinery. Terminology	DD ENV 1070 (1993)	ENV 1070
Code of Practice for safety of machinery	5304 (1988)	

THE MIXER(S) ARE CONSIDERED AS COMPONENTS OF A SYSTEM.

THIS MACHINERY MUST NOT BE PUT INTO SERVICE UNTIL THE MACHINERY INTO WHICH IT IS TO BE INCORPORATED HAS BEEN DECLARED IN CONFORMITY WITH THE PROVISIONS OF THE MACHINERY DIRECTIVES 89/392/EEC, 91/368/EEC, 93/68/EEC AND 93/44/EEC.

Signed ....

A. LA MOURY

Name (Block Capitals) .....

GENERAL MANAGER

Position .....

For and on behalf of Mixertech Limited